Service Manual

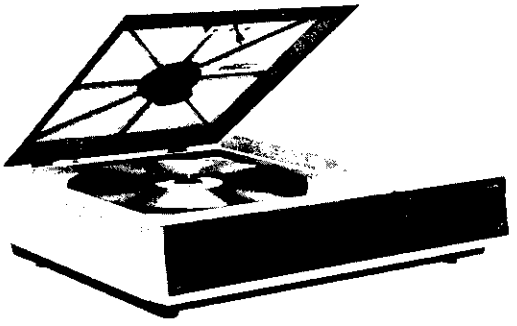

ORDER NO.
VRT-019-0

VIDEO DISC PLAYER

PR-8210-A

CONTENTS

1. SPECIFICATIONS 2
2. PARTS AND CONTROLS 3
3. CONNECTIONS 5
4. DISASSEMBLY 7
5. CIRCUIT DESCRIPTIONS 9
6. SAFETY CHECK 39
7. MECHANICAL ADJUSTMENTS 41
8. SLIDER ASSEMBLY AND ALIGNMENTS . . . 45
9. ELECTRICAL ADJUSTMENTS 53
10. TROUBLE SHOOTING 68
11. SCHEMATIC DIAGRAMS, PCB PATTERNS AND PARTS LISTS 73
    - 11-1 OVERALL 73
    - 11-2 SYPS, LSPS AND MCNB 76
    - 11-3 RFAM 81
    - 11-4 VSOP, CPCB AND PSCB 83
    - 11-5 AUDX 94
    - 11-6 CONT, GATB AND IOIB 98
    - 11-7 KEYC AND IRAB 104
12. EXPLODED VIEWS AND PARTS LISTS 108
    - 12-1 EXTERNAL AND TOP VIEW 108
    - 12-2 BOTTOM VIEW 111
    - 12-3 SLIDER 114
13. SAFETY INFORMATION 116
14. PACKING PROCESS 117

PIONEER®

PIONEER ELECTRONIC CORPORATION 4-1, Meguro 1-Chome, Meguro-ku, Tokyo 153, Japan
PIONEER ELECTRONICS (USA) INC. P.O. Box 1760, Long Beach, California 90801 U.S.A.
PIONEER ELECTRONIC (EUROPE) N.V. Keetberglaan 1, 2740 Beveren, Belgium
PIONEER ELECTRONICS AUSTRALIA PTY. LTD. 178-184 Boundary Road, Braeside, Victoria 3195, Australia

Printed in Japan

1. SPECIFICATIONS

General

System and disc spec.
..... Comply with MCA Philips specifications
*1 Maximum playing time
..... Standard play videodisc: 30 minutes/side
..... Extended play videodisc: 60 minutes/side
Spindle motor revolutions
..... Standard play videodisc: 1800 RPM
..... Extended play videodisc: 1800 RPM (inner circumference) to 600 RPM (outer circumference)
Laser ..... 6328 angstrom, He-Ne 1mW

Video Characteristics

Format ..... NTSC specification
Video output
Level ... 1Vp-p nominal, sync. negative, terminated
Impedance ..... 75 ohm unbalanced
Terminal ..... BNC type jack
Signal to noise ratio ..... More than 42dB

Audio Characteristics

Audio output ..... Two channels; stereo or two individual channels
Level ..... 650mV nominal (1kHz 100% mod. 50 kilohms terminated)
Impedance ..... Less than 2.2 kilohms unbalanced
Terminal ..... Stereo pinjacks
Total harmonic distortion ..... Less than 0.3% (1kHz 75% mod.)
Signal to noise ratio ..... More than 70dB (CX encoded disc, CX NR ON, 1kHz 650mV output, using IHF A network)
Frequency response ... 40Hz to 20kHz (±3dB reference to 1kHz 10% mod.)

External controls

Terminal ..... 24 Pins amphenol type

Functions

	CAV	CLV
Play (Normal play mode with sounds) ...	YES	YES
Pause (Pause mode without picture and sounds)	YES	YES
Scan forward/reverse	YES	YES

Others

Power requirements ..... AC 120V, 60Hz
Power consumptions 85-watts
Dimensions ..... 525(W) x 408(D) x 143(H) mm. 20-21/32(W) x 15-13/16(D) x 5-5/8(H) in.
Net weight (without package) ..... 13.5kg (29.8 lbs)

Furnished Accessories

Audio connecting cords with pinplugs 1
Operating instructions 1

NOTES:
Specifications and the design subject to possible modification without notice, due to improvements.
**1 Actual playback time differs for each disc.*

2. PARTS AND CONTROLS

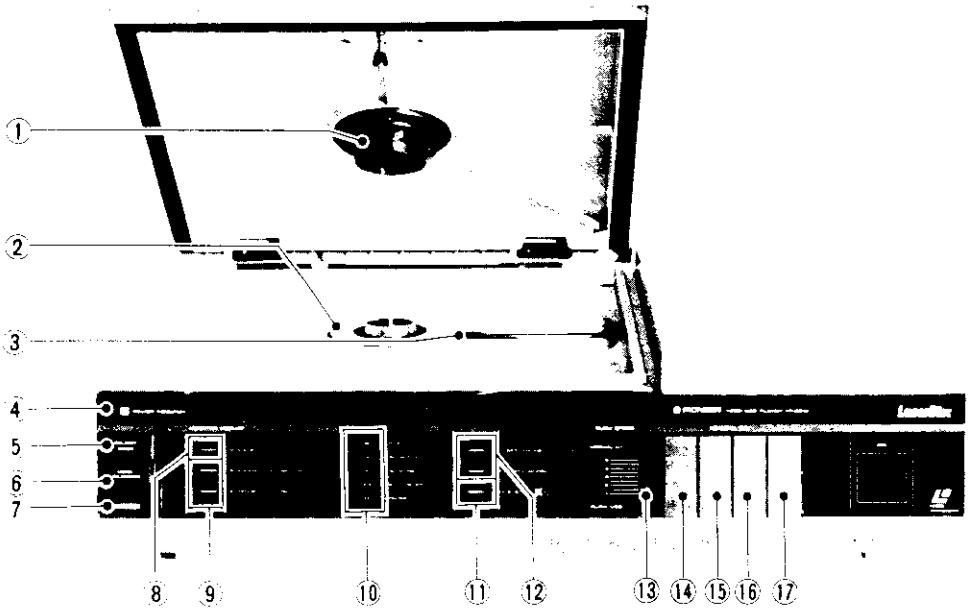

① DISC CLAMP

This holds the disc onto the turntable when the hood is closed to assure that the disc rotates smoothly.

② TURNTABLE

Place a disc on this platter so it fits over the raised center hub. The turntable is directly connected to the motor so the precise speed is maintained at all times.

③ OBJECTIVE LENS

This lens focuses the laser beam onto the disc and picks up the beam reflected back from the disc. Note that the lens surface must be kept clean in order to maintain optimum performance.

④ POWER

Press this switch to turn power on and off.

⑤ POWER INDICATOR

This lights up to show the power is on.

⑥ REJECT/OPEN

Press this key to cut off operation and to open the hood.

⑦ HOOD UNLOCKED INDICATOR

This indicator lights up when the hood is open and goes out when the hood is completely closed and locked. Note that the player can not be operated until this indicator goes out.

⑧ STAND BY INDICATOR

This indicator flashes on and off during those periods when some time is required for the player to switch to the next commanded function mode. For example: When ► marked end of the PLAY/PAUSE key is pressed after REJECT, during the return period.

⑨ DISC INDICATORS

A few moments after ► marked end of the PLAY/PAUSE key has been pressed, one of these indicators shows whether a CAV or CLV disc is being played.

⑩ PLAYBACK MODE INDICATORS

One of these indicators shows the playback mode presently selected.

⑪ CX INDICATOR

This indicator lights when the CX noise reduction system is activated.

⑫ AUDIO INDICATORS

These indicators show whether only one or both audio channels are being heard.

⑬ SLOW SPEED CONTROL

Use this control to adjust the speed of slow motion playback.

NOTE:
Slow motion playback is possible only when an external controller is being used to control the player. Slow motion playback can not be performed using the buttons on the player itself.

⑭ PLAY/PAUSE

Pressing the ▶ mark on the upperside of the switch starts playback or returns to normal play mode from another mode. To temporarily stop playback, press the ❚❚ mark on the lower side of the switch. This stops the pickup, turns off both picture and sound. Pressing the ❚❚ mark again cancels the pause mode.

⑮ SCAN

Use this key to quickly locate a particular part of the disc program or skip a part of the program.

▶▶ : press to scan quickly forward
◀◀ : press to scan quickly backward

⑯ AUDIO 1/L, 2/R

Use this key to turn sound off and on in the left or right channel. Pressing either end of the key turns off sound in that channel; press again to turn sound back on.

⑰ CX SYSTEM

This key turns the CX noise reduction system on and off. Turn the CX system on when playing a CX encoded disc.

3. CONNECTIONS

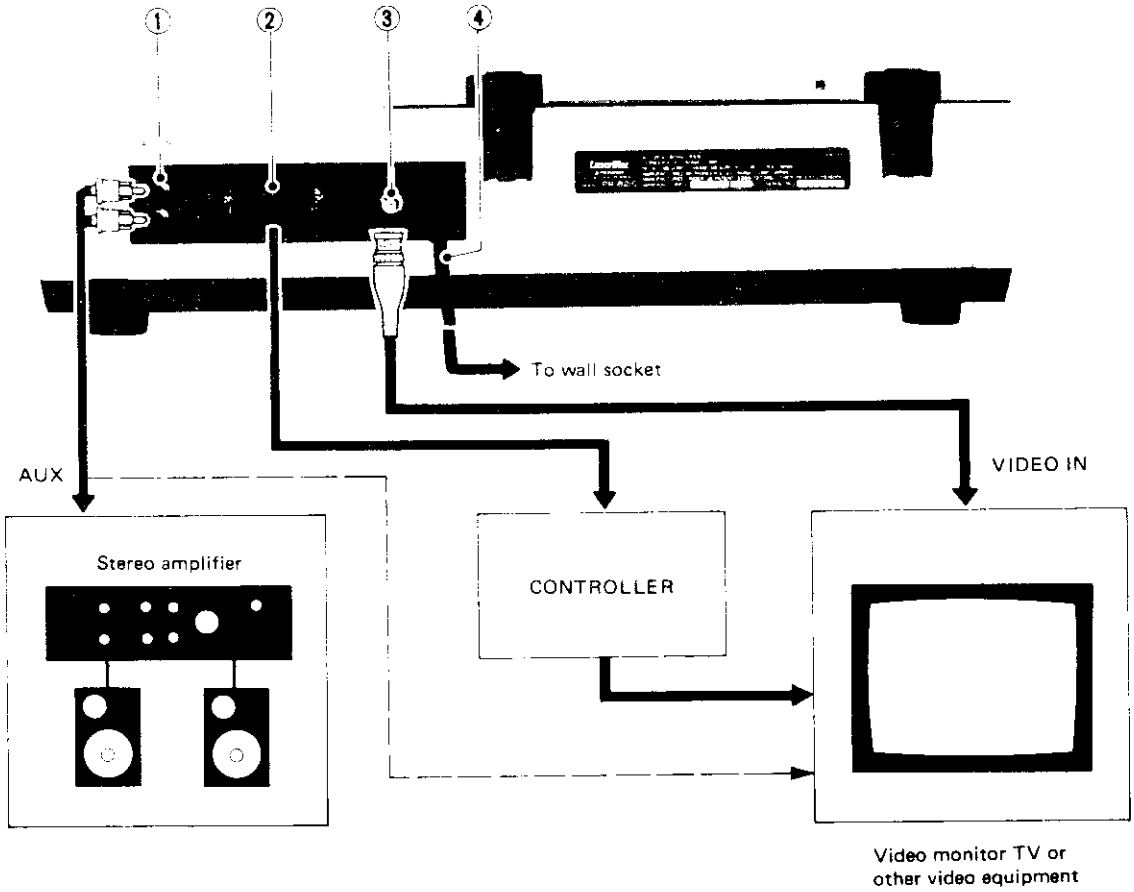

Use the coaxial cable to connect the VIDEO OUT terminal on the player to the video input terminal on the monitor TV or other video equipment (terminated video input terminal).
Audio output on the player should be connected to the audio inputs of the monitor TV (or other video equipment) or to the stereo system for audio reproduction.

NOTE:
The connections diagram shows only one example of the possible ways to perform connections. The method of connection differs depending on the control unit, video equipment and other units being used.

① AUDIO OUT
These jacks provide the left and right channel audio signals for connection to a stereo hi-fi system.

② EXT CONTROL
This terminal is used as an I/O port when the player is controlled by a controller.

③ VIDEO OUT
The terminal is for connection to a color video monitor TV or other video equipment (that have video input terminal). It provides the direct video signal.

④ POWER CORD
Plug this into a wall socket.

4. DISASSEMBLY

1. ENCLOSURE AND PCBS

Under housing
- Unscrew 7 screws marked ⑥.

Printed circuit boards
- Unscrew 4 screws marked ⑤.

Front panel
- Unscrew 3 screws marked ④.

Top housing
- Undo the ring, and sl disengage the locking
- Unscrew 3 screws ma the turntable.
- Unscrew 9 screws ma

Remove parts in the order above sequence diagram. For exa the top housing, the under housing and the hood must first be remove

Note: Loosen the shipping screw b ing disassembly procedures tion of repairs, check th screw, lens cap, shield ca other shields have been f positions.

2. HOW TO REMOVE SLIDER FROM MECH-CHASSIS

1. Remove the four fixing screws on the VSOP board, and open the VSOP.
2. Put the slider harness out of the joint by removing the E washer, and disconnect the housings N4, N5, and high voltage cap.
3. Remove the two screws installed the slider-pot assembly.
4. Remove the four screws installed the rail near the slider pot.

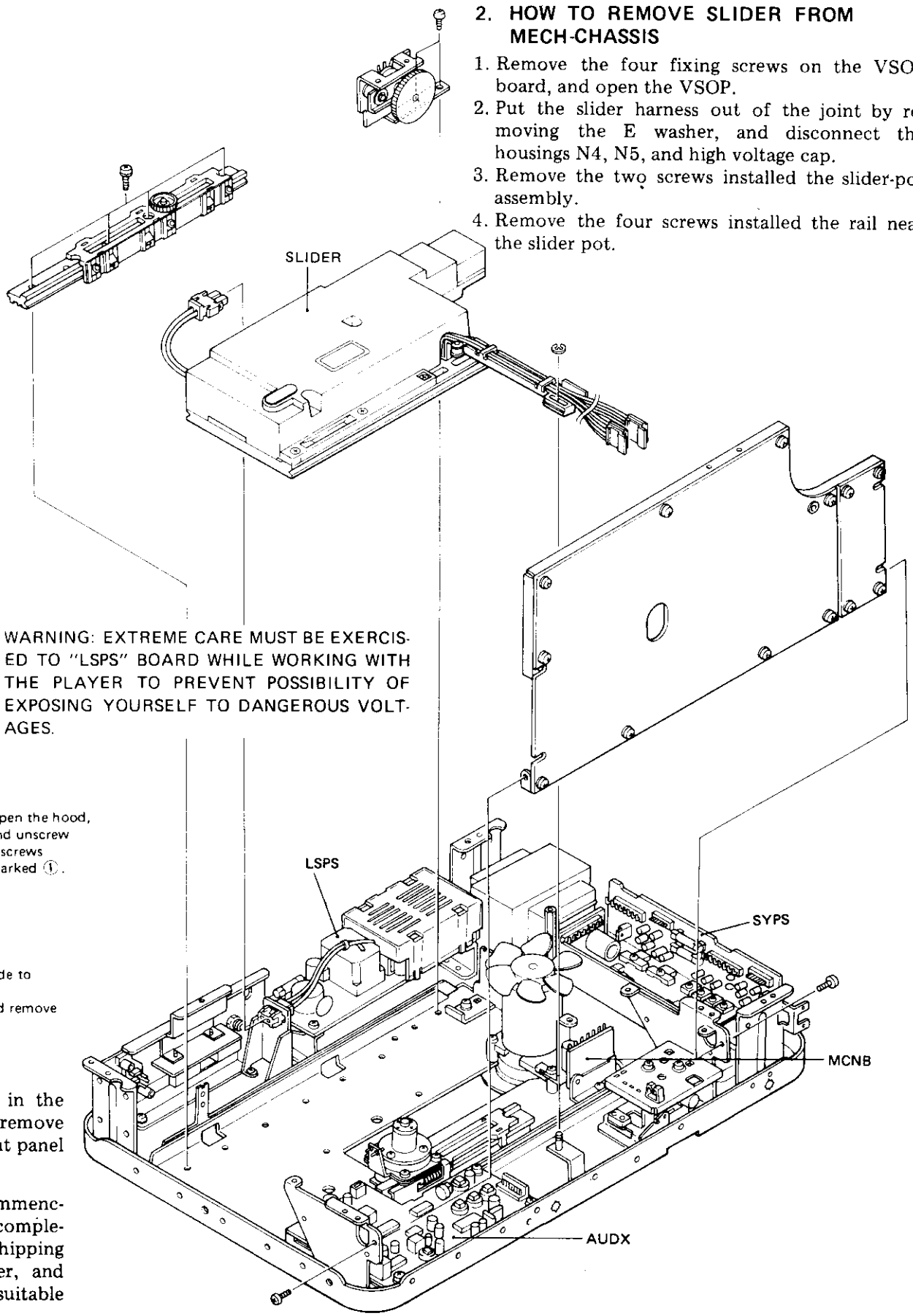

WARNING: EXTREME CARE MUST BE EXERCISED TO "LSPS" BOARD WHILE WORKING WITH THE PLAYER TO PREVENT POSSIBILITY OF EXPOSING YOURSELF TO DANGEROUS VOLTAGES.

er housing

Unscrew 7 screws marked ⑥.

ont panel

Unscrew 3 screws marked ④.

housing

do the ring, and shift to one side to engage the locking catches.
screw 3 screws marked ②, and remove turntable.
screw 9 screws marked ③.

Hood

• Open the hood, and unscrew 6 screws marked ①.

the order indicated in the am. For example, to remove under housing, the front panel st be removed.

pping screw before commenc- procedures. Upon comple- s, check that the shipping p, shield case, barrier, and have been fixed in suitable

5. CIRCUIT DESCRIPTIONS

5-1 RFAM

RFAM consists of PHDB (photo detector board) and HEDA (head amp) is mounted on the slider assembly. The photo detector mounted on PHDB picks up the various signals, and after passing them through a filter choke to eliminate the 620MHz spurious signal generated by the laser tube, outputs them to HEDA.

The FM signal is amplified by about 20dB by the negative feedback amp. Transistors Q1 and Q2 form a cascade connected amplifier stage, and Q3 is an emitter follower. The RF OUT signal is extracted from this point.

The four focus control signals are B1 thru B4. The sums of B1 and B3, and the sums of B2 and B4 are sent to their respective OP amps (Z2) where they are amplified about 17dB, then output as FOCS A and FOCS B signals. Tracking control signals A and C are input to the voltage-follower type OP amp Z1, and extracted as TRKG A and TRKG B output signals.

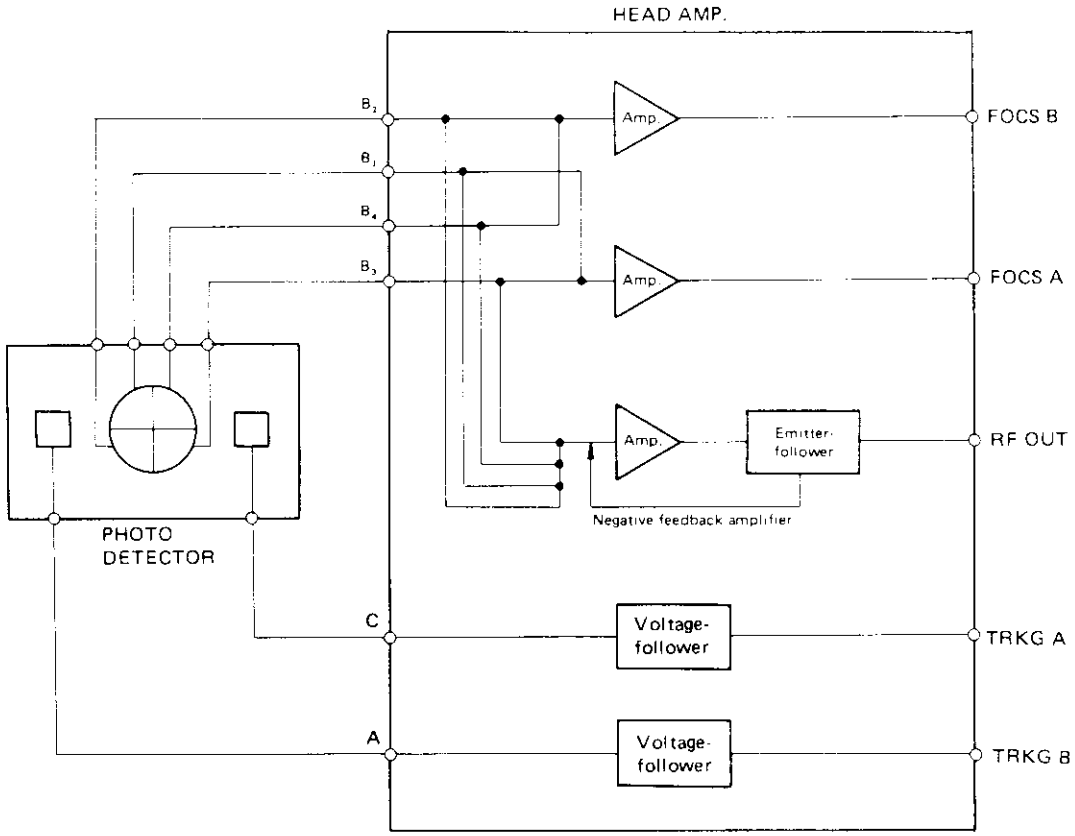

RFAM BLOCK DIAGRAM

Fig. 1 RFAM block diagram

5-2 VDEM (VSOP)

With the UA5002 DOC processor and the UA5001 video processor IC, the VDEM section which occupy 1/3 of the VSOP board handles video signal demodulation and 1H delay video signal demodulation plus video signal switching when dropouts occur. A block diagram of the VDEM section is shown in Fig. 2.

The video and audio FM signals applied to the VSOP board from the RFAM board are applied to the RF correction circuit (Q201~Q203). Since the electrical conversion frequency response in the optical system is lower at the inner circumference than at the outer circumference, there is a certain amount of gain compensation up to frame number #13500 (approx), especially in the high frequency region where the effect is much greater.

Following compensation of the gain difference between inner and outer circumferences, the FM signal is passed to the AUDX board and to the UA5002 DOS RFIN terminals. This signal is also passed through a bandpass filter for video FM signals, and then through an audio FM signal trap in order to extract the video FM signal components. After being applied to pin 24 of UA5001, this FM signal is amplified by Q208 and Q220, detected (level detection), and then applied as the RF sensor output to UM3002 in the SPDL section. Furthermore, the video FM signal delayed by an interval of 1H by the 1H delay line is applied to pin 7 of the UA5002 DOC processor.

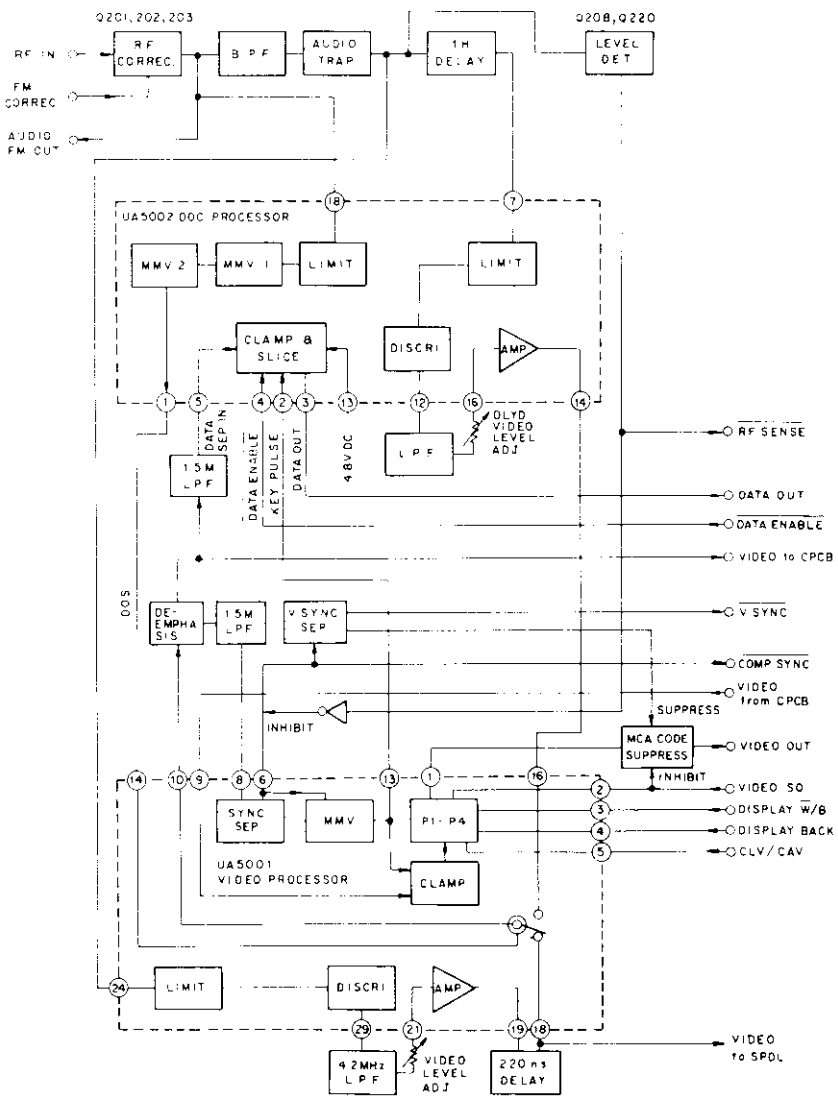

Fig. 2 VDEM section block diagram

Function explanatory diagrams for each function block in UA5001 are outlined in Fig. 3. And waveforms on each terminals are shown in Fig. 4. After aligning the amplitudes of the video FM signals applied to pin 24 by internal limiter, an output signal is obtained from pin 29 (with an external resistor serving as the load), this signal consisting of a frequency (16MHz) twice that of the carrier signal added to the video signal. However, since this signal has not yet been passed through the de-emphasis stage, the high frequency components will still be raised. The video signal detected in the discriminator is passed through a 4.2MHz lowpass filter before being applied to the pin 21 video amplifier where the gain is about 31 to 32dB. The amplified video output signal appearing at pin 19 is passed through a 220ns delay line and then applied to the next DOS switch. (In this model, the video signal is also applied to the SPDL section after the 220ns delay line.) This DOS switch includes 2 inputs — pin 18 for the main line video signal input, and pin 16 for the 1H delay video signal input, plus pin 14 for the "DOS" switch control signal. The output appears at pin 10. The pin 18 input appears at the pin 10 output when pin 14 is at L level, while the pin 16 input appears at pin 10 instead when pin 14 is at H level.

The DOS switch output is passed through the de-emphasis stage and is then applied to CPCB board and a synchronizing separator circuit. The CPCB board is a feed forward circuit which controls phase of chroma components in the video signal, and serves to eliminate color bands and color irregularities in the picture. In addition to separating the synchronization signal, the synchronizing separator circuit also includes a noise cancellation function. Any noise components exceeding the input video signal sync tip level in the negative direction by more than about 0.5V is not accepted as a synchronizing signal, and is not, therefore, included in the synchronizing separator signal output.

In addition to triggering the internal MMV, this synchronizing separator output signal appears at pin 6 as a composite synchronizing signal output. In this model, this composite synchronizing signal is applied to the V synchronizing separator where a signal is generated (and applied to the SPDL sectio) in order to cover the V blanking interval of about 15H from the vertical synchronizing signal. If the FM signal level is not detected, however, this composite synchronizing signal is inhibited.

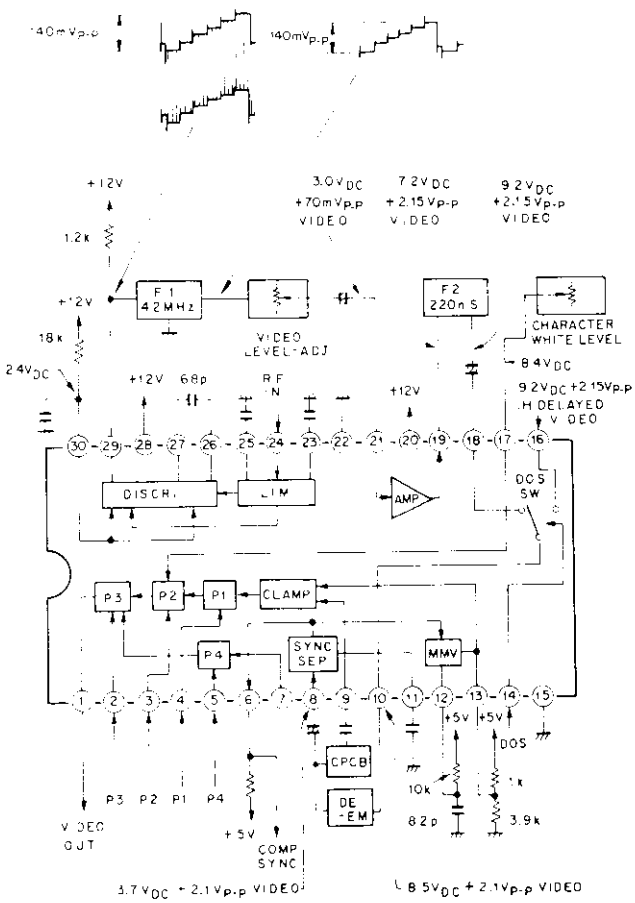

Fig. 3 UA5001 block diagram

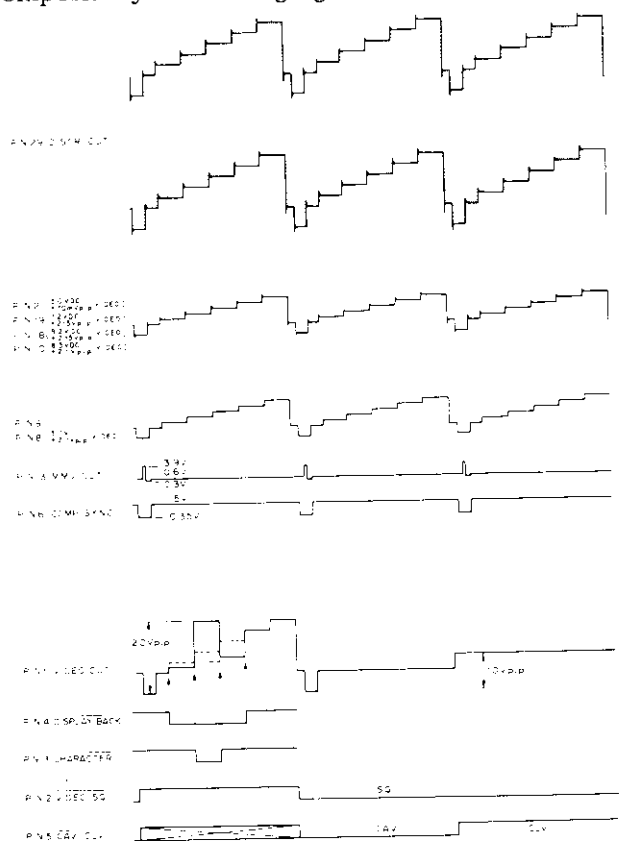

Fig. 4 UA5001 waveforms on each terminals

The MMV triggered by the composite synchronizing signal generates a clamp pulse for keyed clamping of the input video signal applied via pin 9 from the CPCB board. This clamp pulse is also employed as the UA5002 clamp pulse. The clamped video signal is passed via switches P1, P2 and P3, the output appearing at pin 1.

At the P1 switch, the video signal is switched to a signal of half the video level by a display background signal. The P2 switch switches the video signal and the character signal with white level, and in this case, the switched character white level can be adjusted by the voltage applied to pin 17. The P3 switch is involved in video squelching and switching of the video signal with the P4 switch output. When using CAV discs, switch P4 applies the composite synchronizing signal to pin 7 for "soft clamping" purposes, and extracts the signal again when the input level on pin 2 of the P3 switch is changed to L level.

The level of the MCA code which exists within the V blanking interval of the video signal output from pin 1 is suppressed by 70%. The reason for this is to prevent the appearance of the MCA code in the screen during the fly-back period in certain types of TV sets. This operation is inhibited during video squelching.

Fig. 5 outlines the internal functional blocks in the UA5002 DOC processor, and also an example of general application. The delayed video signal applied to pin 7 via the 1H delay line is demodulated by a discriminator circuit (of same composition as the discriminator circuit in the UA5001) with an external resistor connected to pin 12 serving as the load. As can be seen from the discriminator stage signal waveform diagram, the frequency component with a frequency twice that of the carrier frequency is still included in the signal at this stage, but is eliminated by a low-pass filter connected to the load resistor.

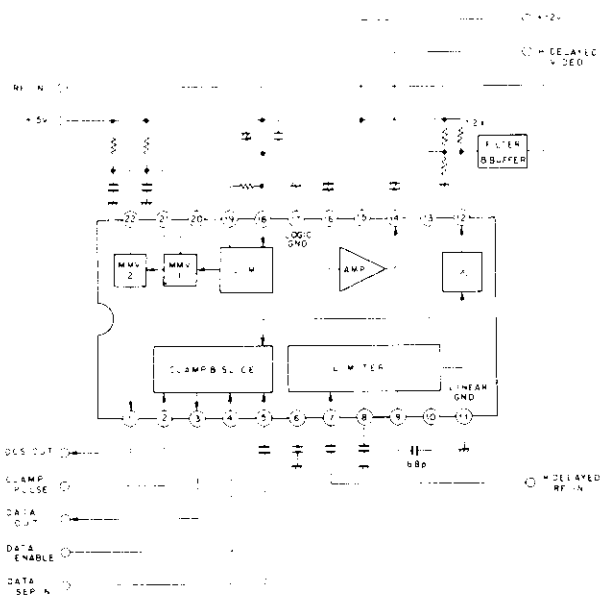

Fig. 5 UA5002 block diagram

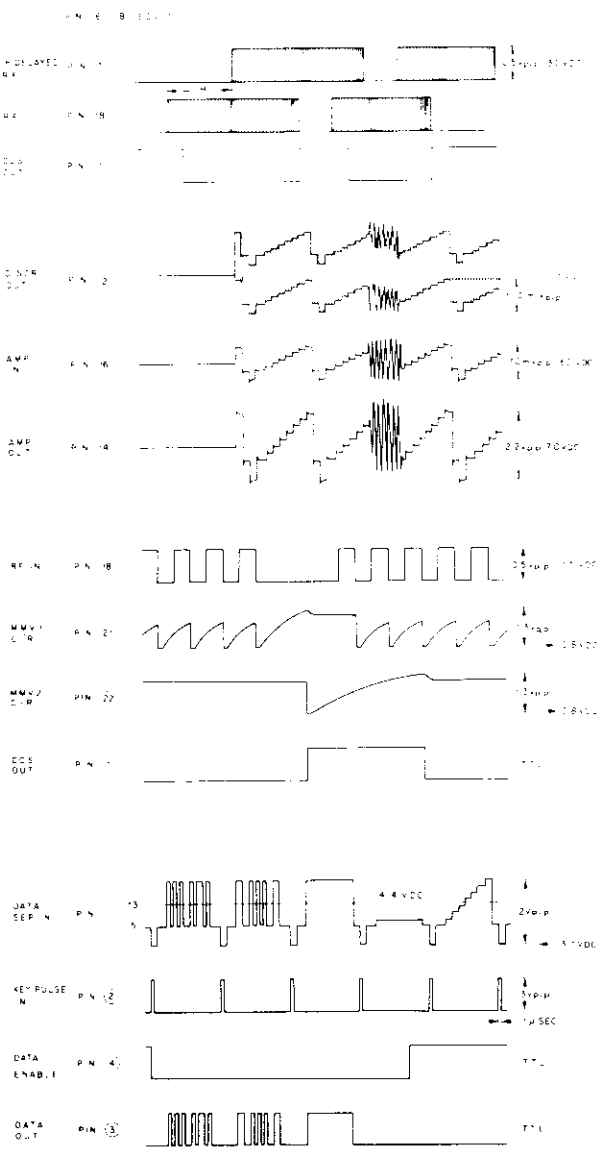

Fig. 6 Waveforms at UA5002 each terminals

The video signal applied to the amplifier connected to pin 16 is amplified by about 30dB in order to obtain a video signal of the required level from pin 14, and since this signal has not been passed through a de-emphasis stage yet, the high frequency region of the signal is boosted as shown in the signal waveform diagram. This signal is applied to pin 16 of UA5001 for compensation purposes when drop-outs are generated.

The FM signal applied to pin 18 is also applied to the limiter and then retriggers the retriggerable MMV1. During this retriggering action, the MMV1 output is maintained at L level, resulting in the MMV2 output also becoming L level. If, however, a drop-out exists in the input FM signal, the MMV1 retriggering action stops, and the MMV2 is consequently triggered. This results in a DOS signal output of constant width from pin 1. The resistor and capacitor connected to pin 21 are used in deciding the MMV1 output pulse width (i.e. the detected drop-out width), while the resistor and capacitor connected to pin 22 determine the MMV2 output pulse width, i.e. the width of the pulse added to the drop-out.

The video output signal from pin 10 of UA5001 is passed through the de-emphasis stage, and then applied to the CPCB board. This signal is also applied to pin 5 of UA5002 in order to extract the phillips code present in the vertical blanking interval. This video signal is then synchronized and clamped by the clamping pulse applied to pin 2, sliced by the DC voltage applied to pin 13, and then appears at the pin 3 output only while the DATAENABLE signal applied to pin 4 is at L level.

5-3 AUDX

Following compensation for level differences between the inner and outer tracks by the RF correction circuit in the VDEM stage, the RF signal is passed to the AUDX board which includes the audio FM detectors, the output selector switches, and the CX noise reduction system decoder. (See block diagram in Fig. 7 below.)

The RF signal applied to pin 1 of the AUDX board is first applied to a low-pass filter where the video FM signal is removed, the RF signal then being amplified by about 37dB. The 1/left and 2/right channel audio FM signals which serve as the respective frequency carrier signals are extracted by 2.3MHz and 2.8MHz band-pass filters, and subsequently passed to the FM detector stage (a quadrature detector utilizing PA3001A).

These demodulated audio signals are applied to respective switching circuits via the audio output level setting controls VR1 and VR2. When the $\overline{AUD1}$ and $\overline{AUD2}$ signals from the CONT board are applied, S1 and S2 are switched on and S3 switched off, resulting in the 1/left and 2/right channel output signals appearing at the switching circuit outputs (A) and (B) respectively. If, however, the $\overline{AUD1}$ (or $\overline{AUD2}$) signal is not received from the CONT board, S2 (S1) and S3 are switched on and S1 (S2) switched off, resulting in the 2/right channel signal appearing at both switching circuit outputs (A) and (B). And if neither the $\overline{AUD1}$ nor $\overline{AUD2}$ input signal is received, S1 and S2 are switched off and S3 switched on, thereby preventing either channel signal from appearing at the (A) and (B) outputs.

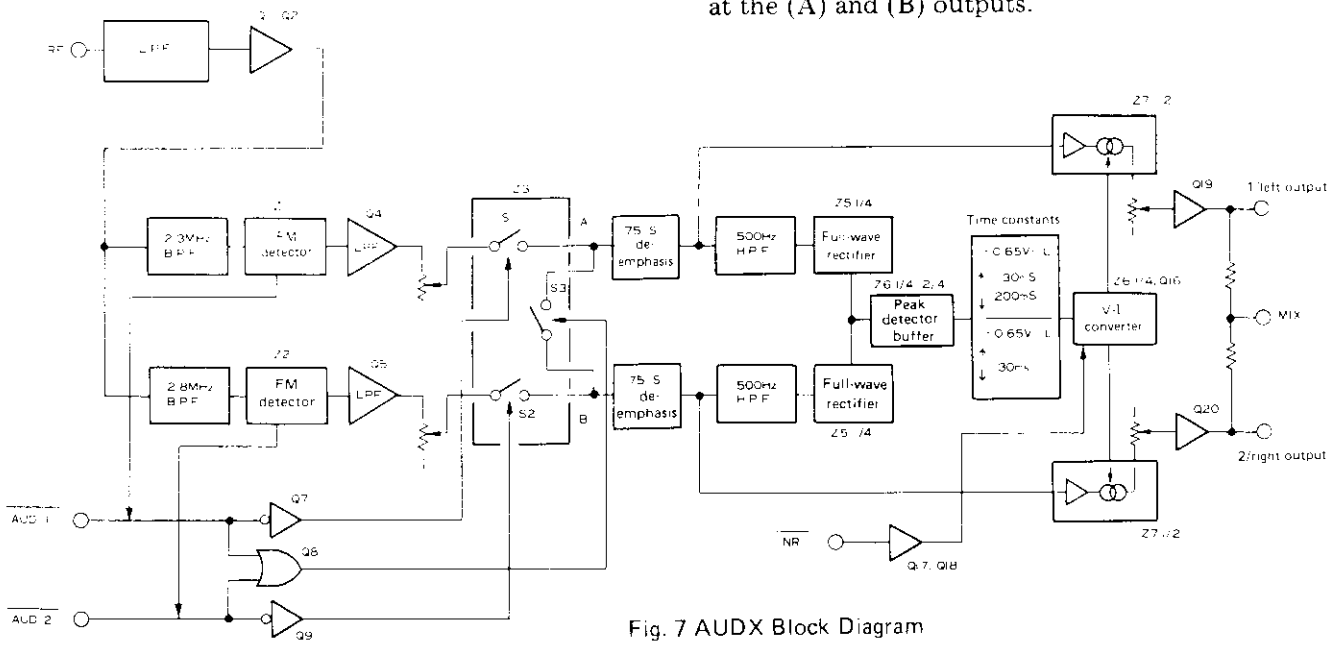

Fig. 7 AUDX Block Diagram

An audio squelch is used to suppress the noise level in the audio output at times when the level of the detector input FM signal is low (such as when the player is first started). In this case, S1 and S2 are switched off and S3 switched on by using the PA3001A AGC output without involving the AUD1 and AUD2 signals from the CONT board.

The audio signals appearing at the switching circuit outputs (A) and (B) are passed through respective 75μs de-emphasis circuits (R18/C14 and R39/C40) before being applied to the CX noise reduction decoder.

This CX noise reduction system reduces unwanted noise by compressing the dynamic range during recording and expanding it again during playback. This system was originally developed by the CBS Research Laboratories for noise reduction in LP records, and has now been modified for use in video discs.

The dynamic range compression and expansion characteristics of this system are dependent upon the following four conditions.

(1) The compression and expansion actions must have no effect on the audio frequencies.
(2) The levels (in dB) of signals greater than −28dB (with reference level of 0dB) must be compressed linearly in a proportion of 2:1, and the level of signals greater than −14dB must be expanded in a proportion of 1:2.
(3) The frequency of signals compressed and expanded must be at least 500Hz.
(4) The compression/expansion control signal is to employ a variable time constant circuit which varies according to audio amplitude level changes.

The block diagram of the CX noise reduction compressor stage is outlined in Fig. 8, the circuit composition being the reverse of the CX expander stage shown in the block diagram in Fig. 7. Reliability of these circuits is ensured by using the same circuit for the compressor feedback circuit and the expander feed forward circuit.

In the compressor, the input signal is passed to a VCA where part of the output is passed through a high-pass filter for peak detection, resulting in a DC voltage being generated at the output of the time constant network. This DC voltage is converted to a current by the V-I converter, the VCA amplification being controlled by the size of the current. The output level therefore varies according to the input signal level. The compression/expansion characteristics of the CX NR system for a 1kHz signal are outlined in Fig. 9.

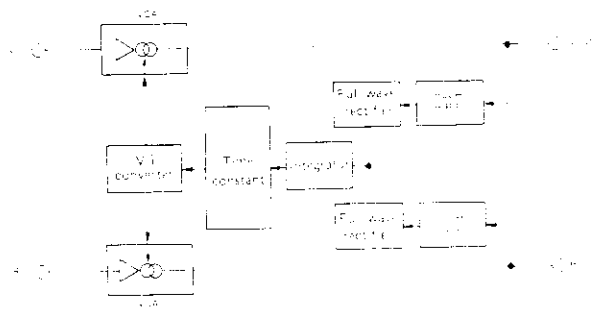

Fig. 8 CX NR system compressor block diagram

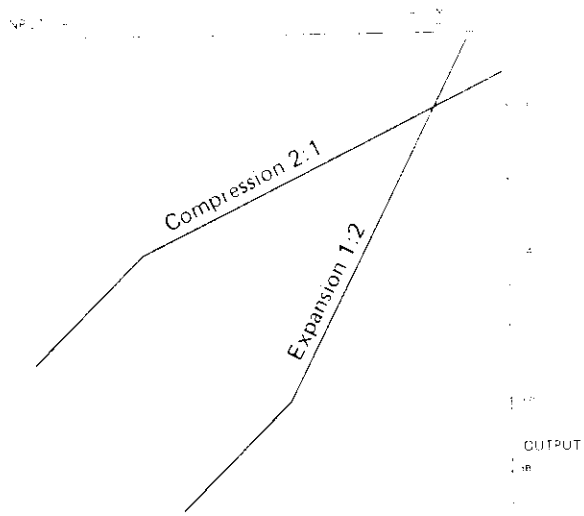

Fig. 9 CX NR system compression/expansion characteristics

With 40% modulation (frequency deviation ± 40kHz) as the system reference level (0dB), signals with a level greater than −28dB are subjected to 1:2 logarithmic compression. Signals of lower level are not compressed.

The basic attack time determined by the time constant network used by the compressor and expander is 1ms for sudden large increases in amplitude, and 30ms for more gradual large amplitude increases. The recovery time is 200ms for decreases of large signals, while the attack and recovery time for small signal amplitude changes is 2 seconds.

The demodulated audio signals passed through the 75μs de-emphasis circuit are applied to current-controlled variable gain amplifiers (consisting of Z7). Part of the de-emphasis output is also passed through a 500Hz high-pass filter (C61/R75 and C62/R80), amplified by Z5 (1/4) and Z5 (3/4), and rectified by the full-wave rectifier consisting of Z5 (2/4), D2, D3, and Z5 (4/4), D4, D5. Due to the forward characteristics of the diodes, this rectifier circuit has a dead zone which ensures that signals below ± 0.6V do not appear at the output.

With this circuit composition, the expander gain for input signals below −14dB (reference value) can be kept at a constant value of −14dB.

Following mixing of the rectifier outputs, bias is applied by Q13, D1 and R83 and addition to D2-D5 temperature compensation. This output is then received by the Q14 emitter-follower while also being subjected to a DC shift. The emitter-follower output is applied to the circuit formed by Z6 (1/4), D6, R85, R86 and C63 for peak level detection and smoothing purposes. This circuit has an attack time of 1ms and a recovery time of 10ms. The filter output is then applied to a time constant network via the Z6 (2/4) voltage-follower.

The attack time of 30ms in this circuit is determined by D7, R87 and C65, while the recovery time of 200ms is determined by D8, R89 and C65. However, due to the dead zone formed by the forward characteristics of D7 and D8, the attack and recovery times for small level changes are determined by R88 and C65, the value being 2 seconds for both times.

The ourput is then passed to the Z6 (3/4) voltage-follower and Z6 (4/4). C64, R90 and R92 form a high-pass filter, the output being applied to the Q15 emitter-follower (which can also be considered a positive voltage half-wave rectifier with a 0.7V dead zone). This circuit operations in conjunction with the D7, R87, C65 circuit in achieving an attack time of 1ms for sudden increases in high level signals.

The output from this time constant network is applied to a V-I converter formed by Z6 (4/4) and Q16. The Z7 gain is controlled by the Q16 collector current, resulting in CX expander input/output characteristics as shown in Fig. 9.

5-4 FOCUS SERVO

Due to the ingenious combination of cylindrical lens and 4-way divider photo-detector, the laser beam reflected from the disc into the photo-detector mounted on the slider results in the generation of a focus error signal where the variation between output level and the distance between the objective lens and disc describes an S curve. By utilizing the linear section of this focus error signal variation curve (S curve), changes in the distance between the objective lens and the disc can be detected and employed in a focus servo mechanism. After this focus error signal is amplified in the RFAM board and processed in the VSOP, it is further amplified (current amplification) in the SYPS board in order to drive the focus motor. In this way the focus motor (objective lens) is operated to maintain focussing error constantly at zero, thereby ensuring that the laser beam is accurately focussed on the disc at all times.

When starting, the objective lens is first raised (as a result of the FOCUS ON command from the CONT board) to a position where the focus servo can be applied, and once the beam is properly focussed ("in focus") the focus servo loop is closed and a FOCUS LOCK command output is sent to the CONT board. The focus servo is thus set to normal operating status, but if proper focussing cannot be achieved within 1 sec after the application of the FOCUS ON command, this command signal will be stopped temporarily and the focussing operation retried 4 times. If it is still not possible to lock the focus servo mechanism, the player is switched automatically to reject mode.

Starting operation

The focus servo mechanism block diagram is outlined in Fig. 10 and the timing sequence chart is shown in Fig. 11. Until the PLAY key is pressed after switching the power on, the FOCUS $\overline{\text{ON}}$ input command is not applied. And with the application of the L level output from the Q5 inverter, the Q2 analog switch remains off. The Q8 inverter output is likewise kept at L level, and a DC voltage of approximately −30mV is applied to the Z2 (1/2) driver amplifier input, thereby keeping the focus motor pulled downwards. The Q4 inverter output, on the other hand, keeps the Q6/Q7 loop flip-flop output at L (Q6) and H (Q7) levels.

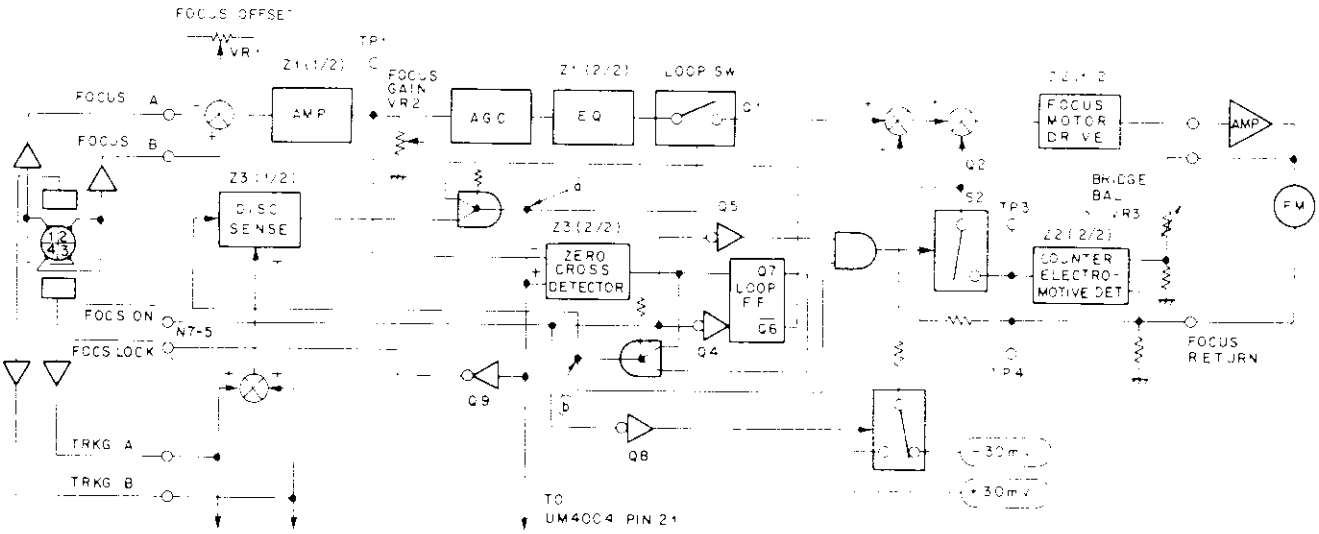

Fig. 10 Focus servo block diagram

When the PLAY key is pressed, the FOCUS ON command from the CONT board is applied to the VSOP board, while at the same time, the LASER ON command is applied to the LSPS board, resulting in the laser generator being switched on. Due to the application of the FOCUS ON command the Q5 inverter output is switched to H level, resulting in this output combining with the Q7 H level output to turn the Q2 analog switch on. And due to the Q8 output, S3 is inverted and a +30mV DC voltage is applied to the Z2 (1/2) input. The circuit constituted by D7, D8, and C11 is for applying a pulse differentiated by a time constant of C11, R52 and R53 to Z2 (1/2), and operates for decreasing a static frictional forse of the focus motor while beginning of the focus motor raising operation, and also increasing a focus motor torque lowered by unbalanced focus bridge. This +30mV DC voltage is amplified in Z2 (1/2) in order to raise the focus motor to the required position. The counter electromotive force appearing between the focus motor terminals at this time as detected (level detection) by the Z2 (2/2) counter electromotive force detector circuit via a bridge circuit, and is then applied to the Z2 (2/2) amplifier as a negative feedback signal. The focus motor can thus be raised at a constant velocity.

When the focus motor is raised to about 60 μm below the proper focusing position, tracking error will commence to appear. This tracking error is generated in A and B forms, and appears as an output from the RFAM board. These signals are added and applied to the Z3 (1/2) disc sensor comparator input. The output from the Z3 (2/2) zero-cross detector is an H level output, and increases the disc sensor comparator threshold level in the (+) direction. When the tracking error level is increased to a value in excess of the threshold level, the output of Z3 (1/2) is switched to H level. The reason for increasing the disc sensor comparator threshold level at this time is to eliminate the effect of the reflected beam from the disc surface (protective plastic surface).

When the objective lens is raised further, focus error is generated, resulting in A and B focus error signals from the RFAM board being applied to the Z1 (1/2) differential amplifier input. The focus error appearing at the output of the Z1 (1/2) amplifier is applied to the zero-cross detector (−) input. If the objective lens is raised still further, the focus error change will reach the non-linear section of the S-shaped curve, and at the point where the threshold level determined by the (+) input voltage is exceeded, the detector output will be switched to L level. The loop flip-flop outputs Q7 and Q6 will thus be switched to L and H levels respectively,

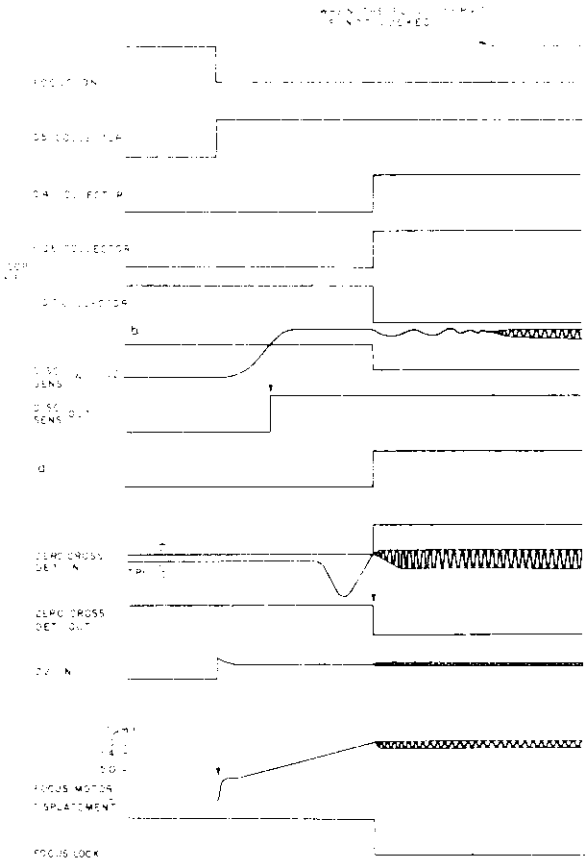

Fig. 11 Focus servo timing chart

thereby closing the Q1 loop switch, and resulting in the closure of the focus servo.

At the same time, the zero-cross detector threshold level is raised in the (+) direction, and the disc sensor comparator threshold level is reduced by about +0.2V, followed by the FOCUS LOCK command signal being sent to the CONT board. And thereafter, the focus servo mechanism is in normal operating mode.

Normal Operation

Focus error A, B is amplified by a differential amp consisting of Z1 (2/2). VR1 serves as the overall voltage adjustment for focus offset caused by the RFAM section DC offset voltage, photo detector sensitivity corrections, slight deviations from the optical focus point, and other factors.

The focus error that appears in the output of Z1 (1/2) passes through VR2 to set the loop gain and then enters the AGC circuit. When the loop gain is raised above the level normally required, noise generated in the system is caused by the increasing amount of static generated by the focus motor. Also, the system becomes susceptible to

defocusing due to tracking mirror movements during scanning and other similar operations. However, when the gain is small, it is possible that the focus offset voltage will not be able to keep up with the focus servo (the input disturbances). To prevent this, gain is automatically raised only when setting the loop gain so that VR2 has a stable and sufficient gain at the same time there is a great deal of disturbance in the AGC circuit. This operation is performed by D1, D2 and C2, C3, and R9 in reverse parallel connection.

Z2 (2/2) forms an equalizer to stabilize the loop. During standard operation, the loop switch is left on by Q1, and the focus error is amplified by the drive amp as controlled by Z2 (1/2). As described earlier, the output of this drive amp is current amplified in the SYPS amplifier and drives the focus motor.

5-5 TRACKING SERVO AND SLIDER SERVO

The major component in the tracking and slider servo systems is the UM4004 TRKG IC. See the block diagram in Fig. 12.

The photo-detector outputs from both sides of the center segments divided in 4 parts on the slider are amplified by the RFAM, and then applied to N4-7 and N4-8 in the VSOP board. The difference between these signals is extracted in Z4 (1/2) and is applied to Z4 (2/2) as the tracking error. Q10 forms part of the Z4 (2/2) feedback loop, and due to the slider potentiometer output the change in resistance across the D-S interval is practically linear from the inside to the outside circumference of the disc. Consequently, the loop gain at the outside disc track is increased approximately 4dB compared with at the inside disc track. The tracking error amplified by Z4 (2/2) and compensated for level differences between inside and outside tracks is applied to UM4004 via VR5. This VR control is used to ensure optimum loop gain adjustment for the tracking servo.

The major components incorporated in UM4004 are described below in a little more detail.

AMP1 and AMP2 form the tracking servo op. amp. stage, while switch 1 operates as the servo loop open/close switch. The loop is open when the switch is on, and closed when the switch is off. AMP3 and AMP4 form the slider servo op. amp. stage with switch 2 serving as the servo loop open/closed switch. The loop F.F. circuit opens and closes the loop by controlling switches 1 & 2.

There are 3 comparators. COMP1 detects the zero cross-point of the tracking error signal for determining the loop closing timing. COMP2 is a window comparator which is applied an input voltage corresponding to the degree of rotation in the TRKG mirror, and is used in limiting the mirror's field of vision. COMP3 is not used in this model.

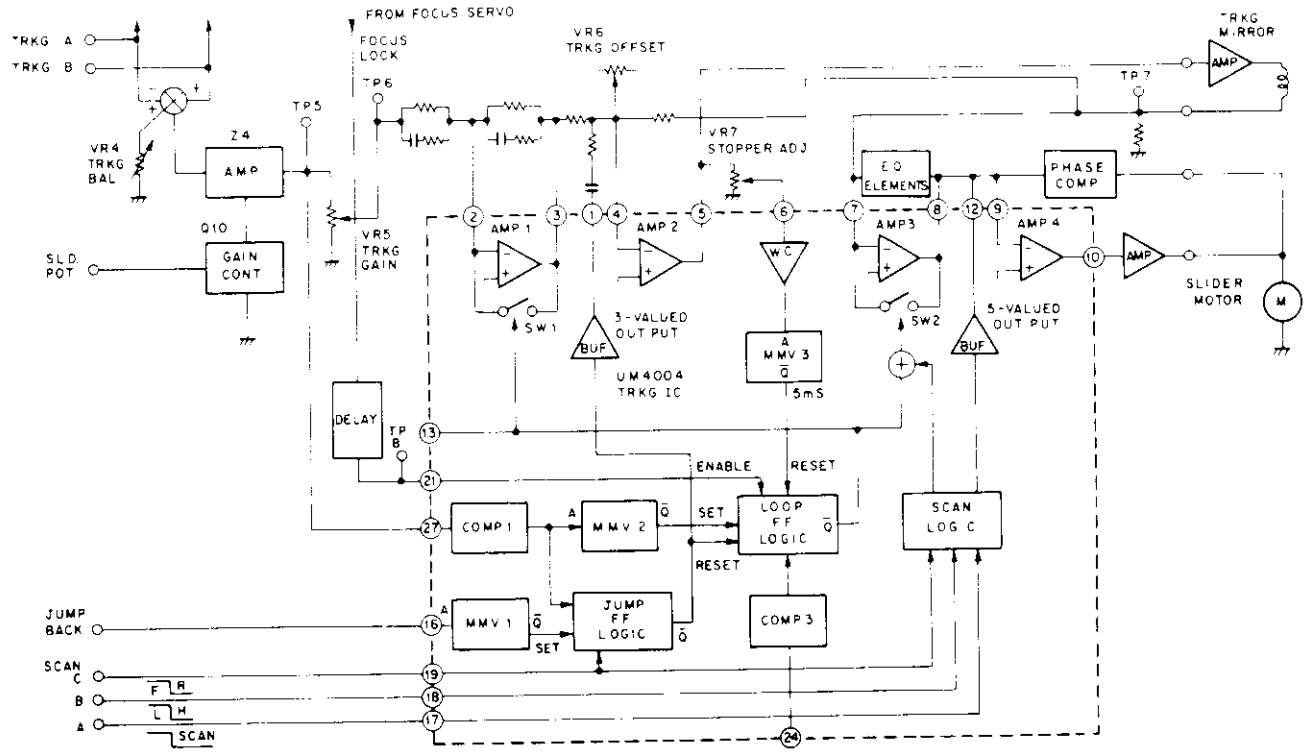

Fig. 12 Tracking & slider servo block diagram

There are also 3 MMV components. MMV1 is triggered by a jump-back trigger signal from the CONT board, and sets the jump F.F. by generating pulse outputs of approx. 100μs. MMV2 is triggered by a pulse corresponding to the zero cross-point of the tracking error. Since MMV2 is a re-trigger type component with an output pulse width set to about 100μs, an L level output will be maintained without inversion while the trigger pulse repetition frequency is more than 10kHz. MMV3 is triggered by the output of the window comparator in the previous stage, resulting in the generation of output pulses of about 5ms in width which serve as resetting signals for the loop F.F. in the next stage. Pin No. 1 is for jump pulse outputs generated when the jump F.F. in the next stage is set by the MMV1 output. Although the output pulse polarity is determined by the SCAN C signal, only the −6.6V output is obtained in this model. Pin No. 12 is for the DC outputs employed to drive the slider during scan mode. There are 5 output voltages altogether, viz. +6.6V, −6.6V (high scan), +3.3V, −3.3V (low scan) and 0V, and these are controlled by the SCAN A, SCAN B and SCAN C input signals.

Start of initial tracking operation from set up mode:

When the PLAY key is pressed, there is a $\overline{\text{FOCUS}}$ $\overline{\text{ON}}$ command output from the CONT board, resulting in the start of focussing by the focus servo mechanism. At the same time, the slider is moved initially in the forward direction by the SCAN A and SCAN C commands in order to locate the inside start position. After a delay of about 0.5 sec. following the $\overline{\text{FOCUS}}$ $\overline{\text{LOCK}}$ command from the focus servo mechanism, an input voltage is applied to pin 21 of UM4004, thereby switching the internal F.F. to enable status. And at approximately the same time, a tracking error signal is applied to pin 27, resulting in COMP1 being inverted by the zero cross-point of that signal. This is followed by triggering of MMV2, and 100μs later, the triggering of the loop F.F., resulting in the tracking and slider servo mechanisms being closed.

See Fig. 13 for an outline of the time chart of this initial tracking operation.

Scanning operation:

The time chart for the scanning operation is outlined in Fig. 14. When the SCAN REV key is pressed, SCAN A (L), SCAN B (H) and SCAN C (L) commands from the CONT board are applied to the UM4004, resulting in switch 2 being turned on by the internal scan logic, and the slider servo thus being made "open loop". At the same time, a −3.3V output voltage appears at pin 12. This voltage is inverted and amplified by AMP4, resulting in the slider being shifted in the reverse direction.

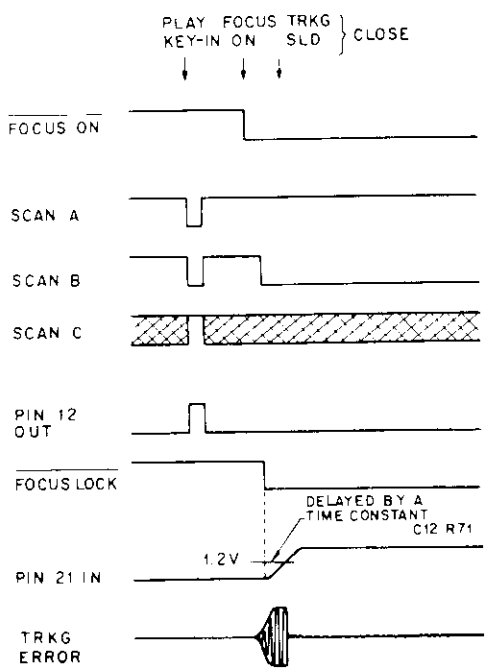

Fig. 13 Initial tracking operation timing chart

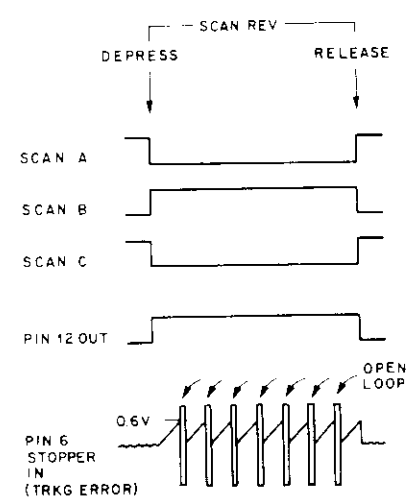

Fig. 14 Scanning operation timing chart

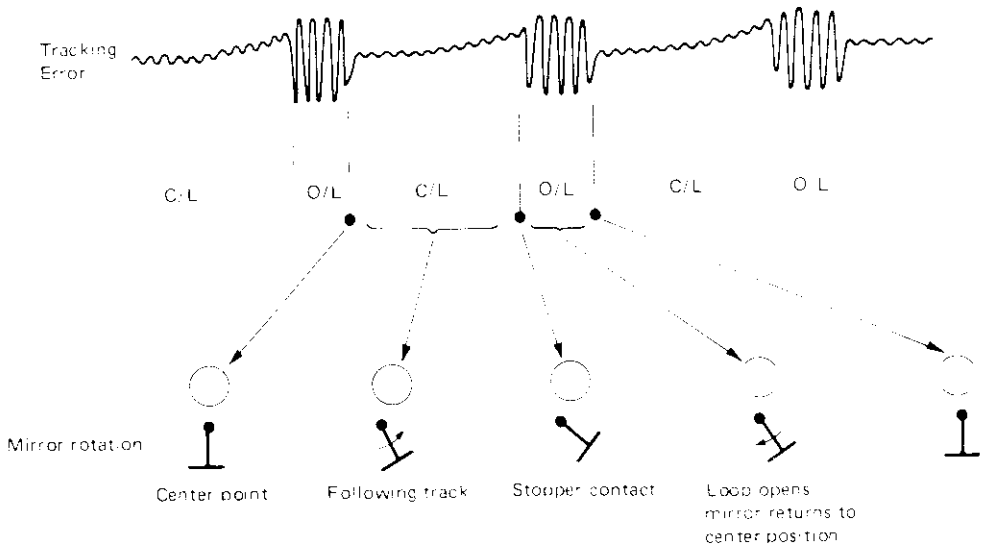

Fig. 15 Tracking mirror operation during scan mode

Although tracking of the disc track is continued while the mirror inclination is increased, the tracking error DC component is also increased, and when the input voltage applied to pin 6 exceeds +0.6V, the window comparator is activated and MMV3 triggered. The loop F.F. turns switch 1 on during the 5ms interval corresponding to the MMV3 output pulse width, resulting in the tracking servo being made "open loop". During this period, the mirror returns to the center position, the loop F.F. is set by the MMV2 output pulse, and switch 1 is turned off (i.e. the tracking servo is switched to "closed loop"). The movement of the TRKG mirror during scan mode is outlined in Fig. 15. The above operation is repeated continually during scan mode, but as soon as the SCAN key is released, the tracking and slider servo mechanisms are switched back to "closed loop" for normal operation.

During still/step and slow motion playback modes, jump-back trigger is also applied to the UM4004 together with the SCAN A (H), SCAN B (L) and SCAN C (L) commands from the CONT board. Although the output pattern of this jump-back trigger differ according to the type of playback mode, it is generated during the v blanking under Philips code control. (See the list of signals in the table referred to during the description of the CONT board).

MMV1 is triggered by the jump-back trigger applied to pin 16. This is then followed by the generation of a −6.6V jump-back pulse signal from pin 1 by the jump F.F., while at the same time the loop F.F. is also reset, resulting in the tracking servo mechanisms being switched to "open loop". The jump-back pulse output signal from pin 1 is differentiated, level-adjusted by VR8, and then applied to AMP2.

The laser beam traverses the tracks as indicated in the time chart Fig. 16 and moves to an intermediate point between one track and the next. When the tracking error intersects the zero cross-point in the positive direction, the pin 1 jump-back pulse output returns to 0V resulting in the tracking loop being closed, and the differentiated DC voltage being applied to the AMP2 input in a direction which will suppress the inertial movement of the mirror.

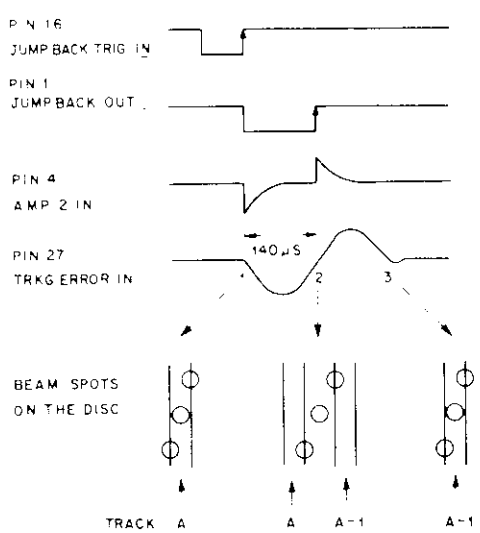

Fig. 16 Jump back operation timing chart

5-6 SPINDLE AND TANGENTIAL SERVO

1. General Outline

By comparing the phase of a reference signal with the phase of the synchronizing signal separated from the video signal reproduced from the disc, the spindle servo maintains the spindle motor rpm at a constant value. However, due to the disc eccentricity and track irregularities, time base errors of 30μsp-p are generated in the reproduced video signal, resulting in failure to obtain normal color in the reproduced picture (since the errors exceed the TV receiver color lock range). It is therefore, necessary to suppress the time base errors to a level not exceeding 20μsp-p, and this is achieved by comparing the phase of the reproduced color burst with the phase of a reference oscillation signal, and sub-sequently driving a tangential mirror to control the tangential movement of the laser beam. For this purpose, the following 3 ICs are employed.

(1) Control pulse generator IC (UM5003)
(2) Tangential servo IC (UM3001)
(3) Spindle servo IC (UM3002)

2. Control Pulse Generator Circuit

In order to generate pulses required for the tangential servo and spindle servo, this IC includes

(1) burst gate, limiter and polarity inverter,
(2) reference signal generator and frequency divider circuits,
(3) Equalizing pulse eliminator circuit, and
(4) Sampling pulse generator.

And the block diagram is shown in Fig. 17.

2-a Burst gate, limiter and polarity inverter

When the video signal is passed via C403 and applied to pin 5, a burst signal output is obtained from pin 3. Noise components in the signal are removed by the 3.58MHz tuning circuit, and the burst signal output from pin 3 is applied to the limiter where the signal is subjected to waveform shaping. Since the burst signal phase is inverted every H period, the phase is made uniform at every H period by the polarity inverter, thereby forming the sampling pulse signal for the tangential servo phase comparator.

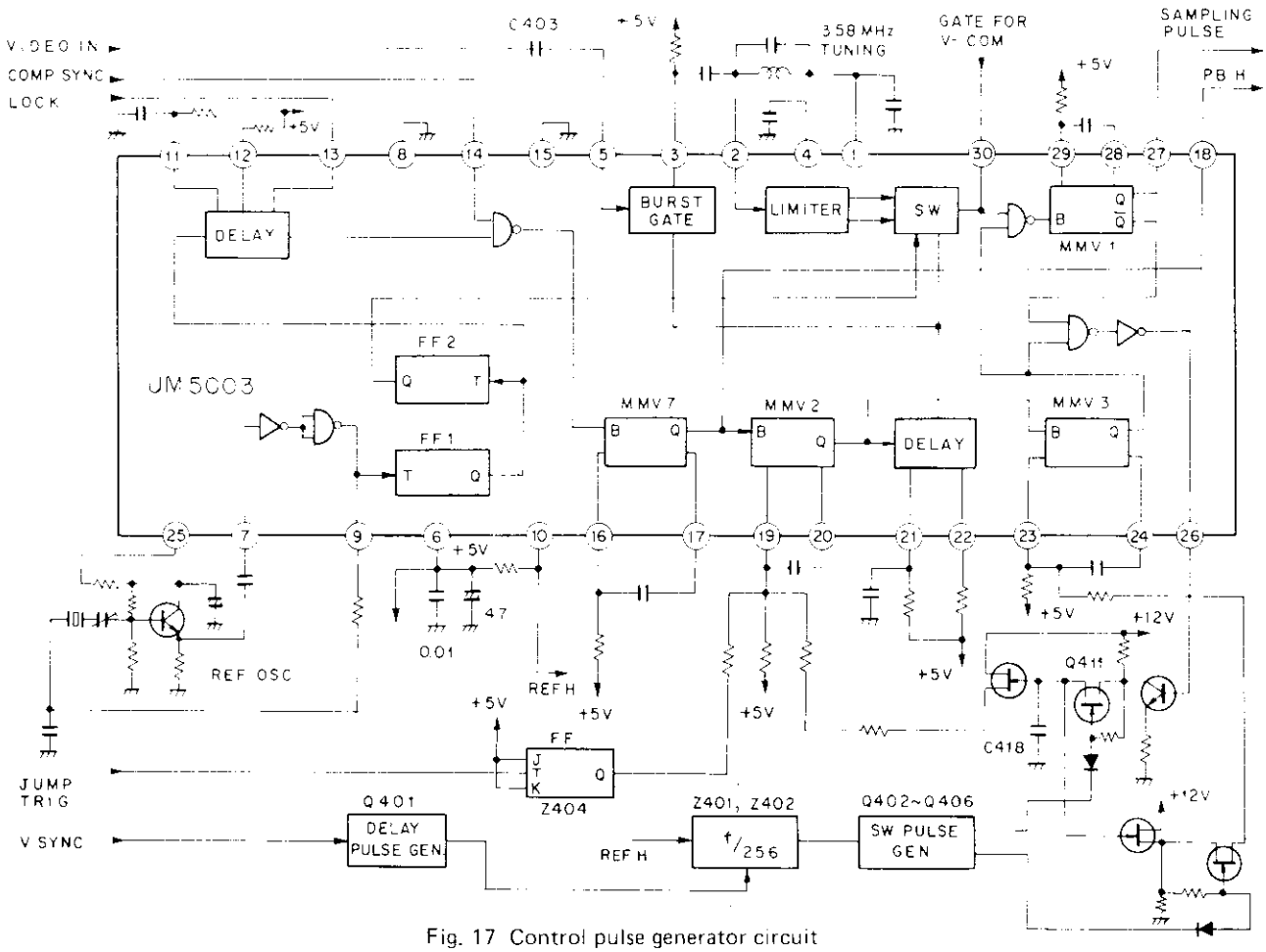

Fig. 17 Control pulse generator circuit

2-b Reference signal generator and frequency divide circuits

A 31.468kHz signal is generated in the feedback loop formed by a crystal oscillator, emitter-follower Q409 and an amplifier stage inside the IC. A 31.468kHz pulse output is obtained from pin 9, and this is divided by 2 to form the reference signal (REF H). By dividing by 2 again, the signal for activating the burst signal polarity inverter circuit is obtained.

2-c Equalizing pulse eliminator circuit

When the synchronizing signal separated from the reproduced video signal in the V-DEM is applied to pin 14, the equalizing pulse is eliminated by operation of a mono-stable multivibrator circuit.

2-d Sampling pulse generator

Since the reproduction synchronizing signal "edge data" is not sufficiently accurate for use as a sampling pulse in the tangential servo mechanism (due to the characteristics of the synchronizing separator circuit), the sampling pulse is formed from the burst signal. A PBH is obtained by eliminating the equalizing pulse from the reproduced synchronizing signal in MMV7. MMV2 and MMV3 are triggered in sequence by this signal, and following an AND operation on the MMV3 output and the shaped burst signal, MMV1 is also triggered. The MMV1 output pulse is used for the sampling pulse. The sampling pulse and MMV3 output are then subjected to an AND operation, resulting in detection and amplification of the time difference between the 2 signals, and subsequent control of the MMV2 time constant. The reason for this is to obtain an accurate sampling pulse despite fluctuations in the burst signal zero-cross point time differences in respect to the SYNC front porch. During stop mode, the jump pulse is divided by flip-flop (Z404) and applied to pin 19 in order to switch the MMV2 time constant, thereby reducing color irregularities in the top part of the picture.

2-e V-COM

Since there are no burst signals in the equalizing pulses intervals and V synchronizing interval, the sampling pulse can't be obtained from the burst signal. So, the modified V synchronizing signal is used for obtaining the sampling pulse in these intervals. Hense, REF H is counted by Z401 and Z402 after the V synchronizing signal which is delayed about 3H by C401 and R402 has come. At the 256th count, pin 11 of Z402 is turned from high to low level, resulting in the generation of the pulse with approximately 9H width by C402 and R405. And this pulse is applied to pin 30 of Z403 via Q403 and used to obtain the sampling pulse in this 9H interval. That pulse with 9H width is also used as switching pulse. When the Q411 FET is switched off by this pulse, the voltage corresponding to the time difference between the sampling pulse and MMV2 output is held by C418. The hold voltage controls MMV3 output pulse width via Q413 and Q414, thereby the sampling pulse is generated at the accurate time.

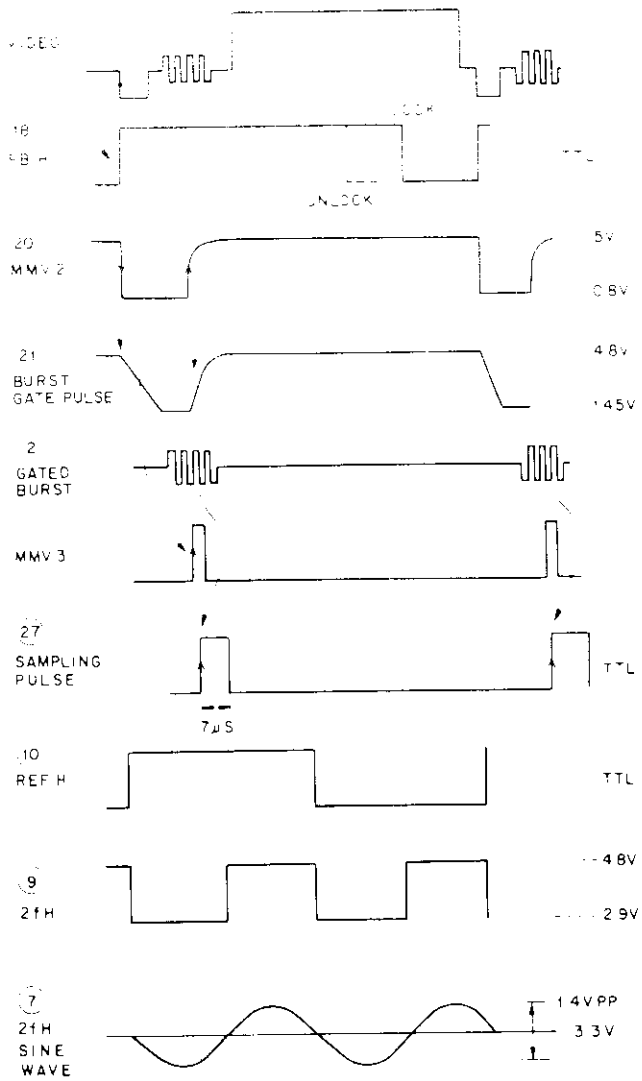

Fig. 18 Waveforms on UA5003

3. Tangential Servo Circuit

The circuits required for control of the tangential mirror are all incorporated in Z405. The major component circuits include:

(a) an equalizer op. amp.,
(b) lock detector circuit,
(c) trapezoidal waveform generator,
(d) sampling hold circuit, and
(e) a phase and frequency detector circuit.

3-a Operation

A reset pulse is formed by input of REF H to pin 8, and the electric charge on C419 is subsequently discharged by this pulse signal. A sloping voltage is thus formed in accordance to the C419 constant charging rate determined by the R538/R438. The C419 charging operation is stopped in order to form a flat section at the sampling position as shown in Fig. 19, thereby obtaining an accurate sample/hold. The sampled voltage is held by C420, and applied to pin 28 via C421 from the Q415 FET buffer. Error is amplified by the AMP1 and AMP2 equalizer amplifier, and further amplified by AMP3 and Z407 in order to drive the tangential mirror. The rotation angle is restricted by AMP4 and diodes in order to prevent the mirror

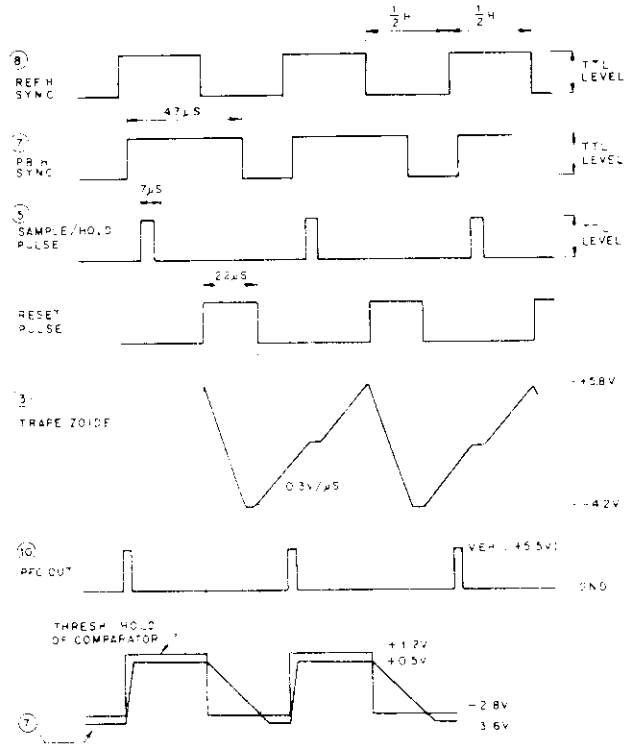

Fig. 19 Sample/hold timing chart

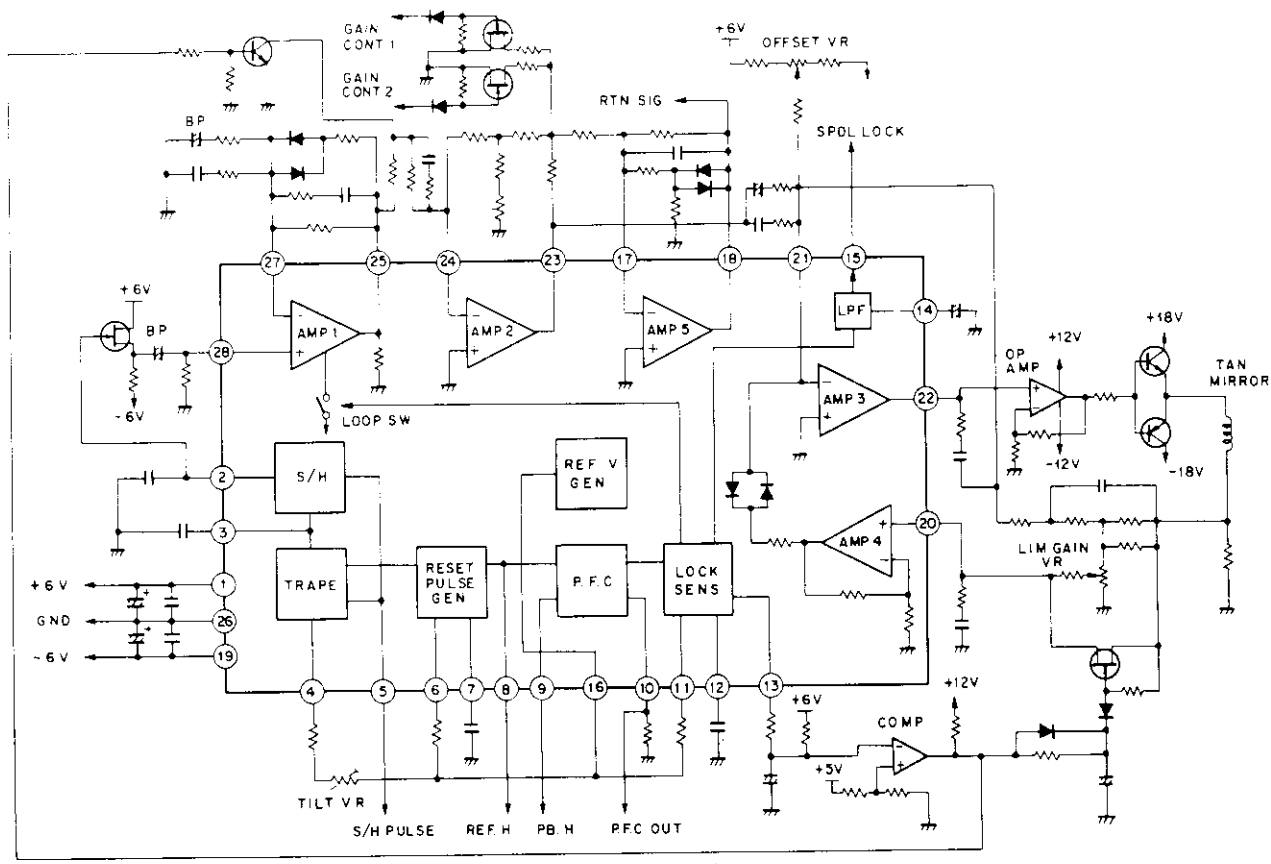

Fig. 20 Tangential servo circuit

rotation too far at maximum input level. Since the required angle of rotation in the tangential mirror increases while moving towards the outer track in CAV discs, the gain is switched in 4-step switching by the Q417/Q418 FET switch. With CLV discs, the gain is fixed. The error signal required for the spindle servo is obtained from the branch point between R454 and R452, amplified by AMP5, and mixed with the PFC output in order to control the spindle motor.

3-b Lock detector circuit

The lock detector circuit includes 2 detectors, one for detecting a phase difference of less than 31.7μs between REF H and PB H, and the other for detecting a difference of less than 10μs. The first is used to switch the tangential servo loop on and off, while the other is obtained as an output from pin 15.

3-c Mirror limiter

When using discs of considerable eccentricity, the movable range of the mirror will be initially rather wide, making lock-in difficult to attain. For this reason, the voltage from pin 13 which appear in the same timing as tangential servo lock is applied to Z408 voltage comparator, and passed through the R529 C451 delay circuit, resulting the Q419 gate voltage is increased gradually. The width of the mirror limiter is thus widened gradually.

4. Spindle Motor Control Circuit

The circuits required for control of the spindle motor are all incorporated in Z406. The major component circuits include:

(1) an op. amp.,
(2) comparator, and
(3) logic circuits.

4-a Starting

When the play key is pressed, RUN from the CONT board is switched from H to L level, resulting in S7 being turned on, and the +Vcc output being obtained from AMP2. Since the externally connected amplifier stage is a non-inverting amplifier, +20V is applied to the motor and the disc starts to rotate. Motor rpms are detected by an AC tacho-generator, and when the rpm reaches 1500, a 1.2V voltage is generated on pin 17. Since the voltage on pin 19 is set exactly to this voltage, COMP2 is inverted. The acceleration drive is then stopped, and the S6 loop switch is turned on. If the focus servo has already been locked, a COMP SYNC signal will be passed from V-DEM, resulting

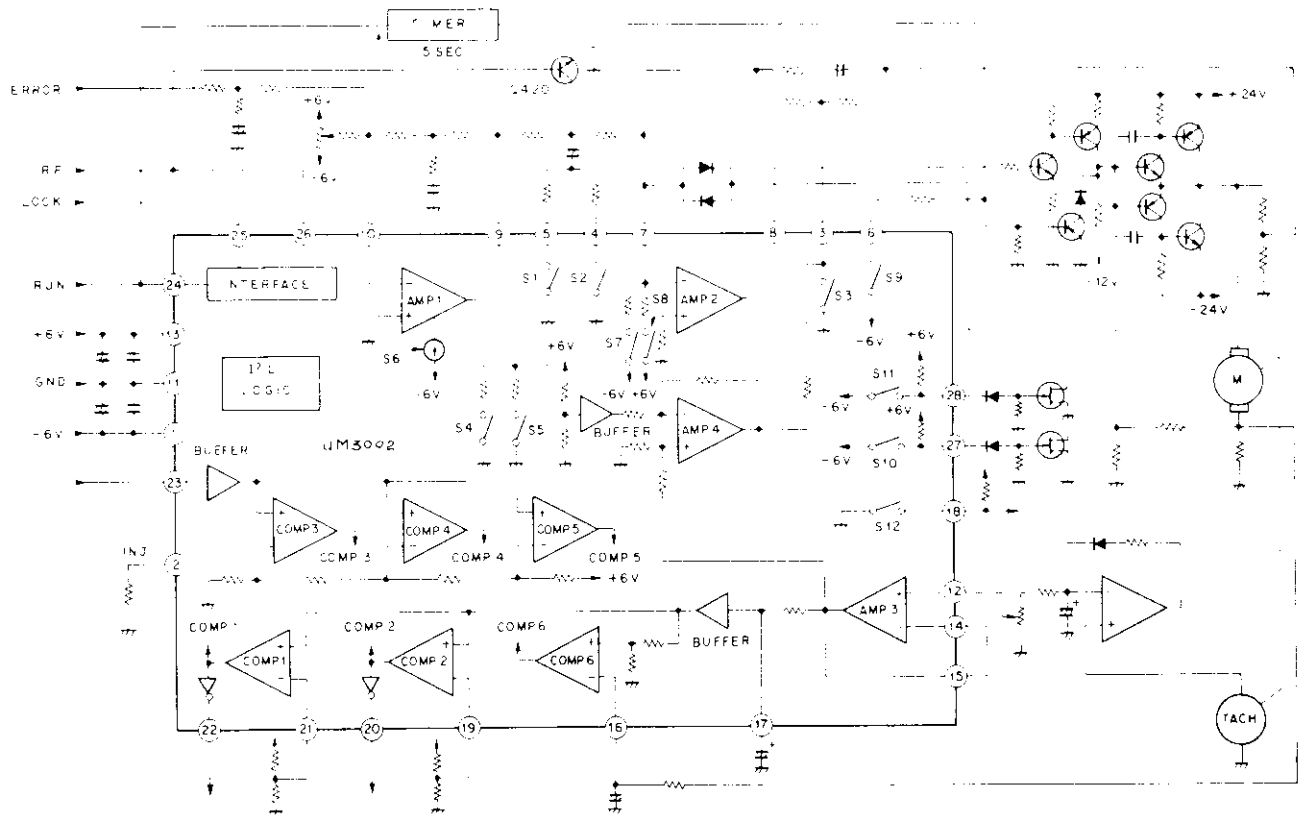

Fig. 21 Spindle motor control circuit

in activation of the Z405 PFC (phase-frequency comparator), and the generation of a pulse signal at pin 10 of Z405 in proportion to the phase difference between REF H and PB H. This pulse signal is passed through a low-pass filter and amplified by AMP1. This output is also amplified by AMP2 and used to control motor speed.

4-b Stopping

When the REJ key is pressed, RUN is switched from L to H level, resulting in S8 being turned on, and the AMP2 output being switched to −0.5V. This output is amplified, and by making the motor terminal voltage negative, effectively brakes the motor. Once the disc rpm drops to 360, COMP1 is inverted, resulting in pin 6 being reduced to −Vcc. Q423 is thus turned on and the brake released.

4-c Gain control

S1 and S2 are turned on or off depending on disc size and type (CLV or CAV), thereby selecting the appropriate gain. This switching status is outlined in Fig. 23.

4-d Motor servo during focus unlock mode

Since PB H is not generated if proper focus is displaced, the spindle motor will tend to speed up in runaway condition. To prevent this, motor rpms are detected by an AC tacho-generator, compared with a reference speed voltage, and the resultant error amplified by AMP4 for use in motor speed control. With CAV discs, this reference voltage is fixed, while with CLV discs it is switched in 4 steps, thereby enabling phase to be locked for a short period when the focus servo is locked.

4-e Disc size detector

The 8 in. and 12 in. disc diameters are detected by COMP6. A voltage proportional to the motor rpm is applied to one of the comparator inputs, while a voltage which detects the motor current is applied to the other, thereby ensuring that disc size is properly determined with both CAV and CLV discs alike.

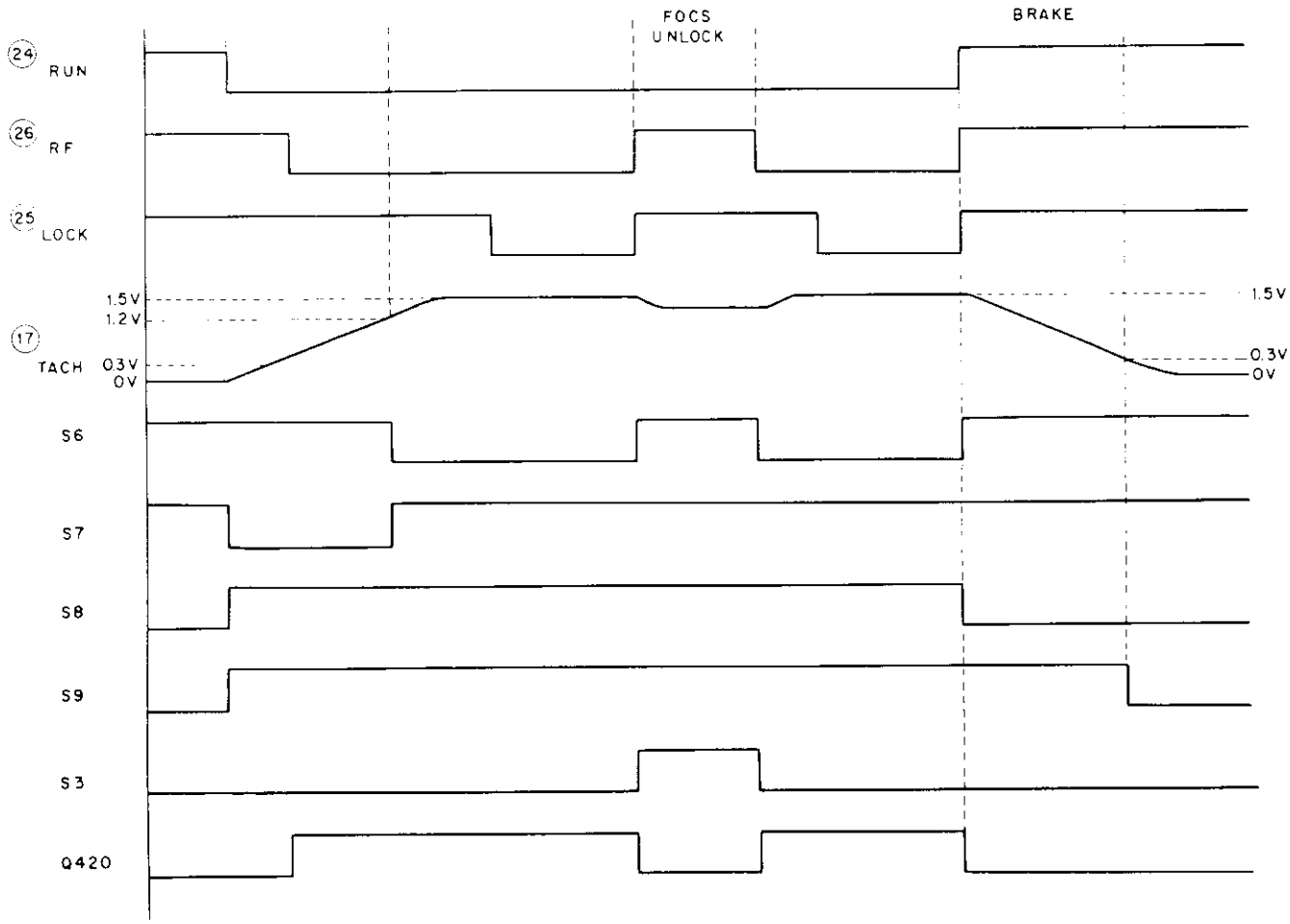

Fig. 22 UM3002 timing chart

SPINDLE MOTOR GAIN CONTROL

	12 INCH		8 INCH	
	CAV	CLV	CAV	CLV
A	OFF	OFF	OFF	OFF
B	OFF	ON	OFF	ON
C	OFF	OFF		
D	OFF	ON		

S1

	12 INCH		8 INCH	
	CAV	CLV	CAV	CLV
A	OFF	OFF	ON	ON
B	OFF	OFF	ON	ON
C	OFF	ON		
D	OFF	ON		

S2

TANGENTIAL MIRROR GAIN CONTROL

	12 INCH		8 INCH	
	CAV	CLV	CAV	CLV
A	ON	ON	ON	ON
B	OFF	ON	OFF	ON
C	ON	ON		
D	OFF	ON		

S10

	12 INCH		8 INCH	
	CAV	CLV	CAV	CLV
A	ON	ON	ON	ON
B	ON	ON	ON	ON
C	OFF	ON		
D	OFF	ON		

S11

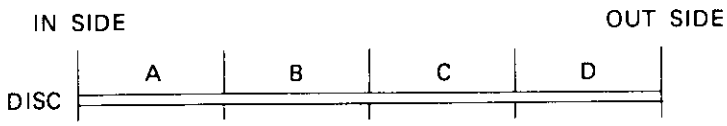

Fig. 23 UM3002 switches status

5-7 CONTROL SYSTEM

The control system for the PR-8210-A consists of the KEYC (KEYA, KEYB), IRAB, and the CONT circuit boards. The microprocessor on the CONT board controls the servo circuits and the various playback modes. This control system also monitors player operating conditions. If an abnormal condition should arise, the control system detects and corrects that condition. In cases where the condition cannot be corrected (such as faulty condition cannot be corrected (such as faulty interlocking during play mode) player operation will be halted.

The following input signals are applied to the CONT board during control operations.

- Key input signals (from KEYC and IRAB)
- Status information signals from various sections of the player.
- Video signal data (including frame no. from VDEM)
- PBH and VSYNC (from VSOP)

The CONT board in turn generates the following output signals.

- Control signals for various sections of the player (applied to VSOP)
- Indicator LED on/off signals (applied to KEYC and IRAB) used to indicate the player operating status.
- Signals used to indicate the frame no. and chapter no. in the TV screen (applied to VDEM)

A list of these input and output signals is given in Fig. 24.

INPUT	POLARITY WAVEFORM	PIN NO
INTER LOCK	CLOSE OPEN	N12-5
FOCS LOCK	LOCK UNLOCK	N13-1
SPDL LOCK	LOCK UNLOCK	N14-2
SIZE 12 B	12 inch 8 inch	N14-1
TRKG C O	OPEN CLOSE	N13-2
F G	STOP ROT	N14-5
SLD POT	IN OUT	N12-2
DATA	48μs	N14-3

CONT board input signals

INPUT	POLARITY WAVEFORM	PIN NO
V SYNC	440μs	N14-6
H D PB H	1H	N14-7
REC		N21-8
SLOW TIMER OUT	STOP SPEED	N20-2

OUTPUT	POLARITY WAVEFORM	PIN NO.
LASER ON	ON OFF	N12-4
LID OPEN	CLOSE OPEN	N12-6
VIDEO SQ	SQ	N14-4
SPDL ON	ON OFF	N14-8
DISPLAY W B	WHITE DOT BLACK DOT	N14-9
DISPLAY BACK	DISPLAY ENABLE DISPLAY INHIBIT	N14-10
DATA ENABLE	ENABLE INHIBIT	N14-11
STEREO	MONO STEREO	N15-1
AUDIO 2	ON OFF	N15-2
AUDIO 1	ON OFF	N15-3
ANS LED	OFF ON	N20-4

CONT board output signals

OUTPUT	POLARITY WAVEFORM	PIN NO.
SLOW TRIG	T	N20-5
CAV LED	OFF ON	N21-4
CLV LED	OFF ON	N21-5
AUD 2 LED	OFF ON	N21-6
AUD 1 LED	OFF ON	N21-7
STANDBY LED	OFF ON	N21-9
JUMP TRIG	41μs	N13-8

OUTPUT	SLIDER DRIVE ON	SLIDER DRIVE OFF	PAUSE	H SCAN REV	H SCAN FWD	L SCAN REV	L SCAN FWD	PIN NO.
SCAN A	H	H	H	L	L	L	L	N13-7
SCAN B	L	H	H	L	L	H	H	N13-6
SCAN C	—	—	L	L	H	L	H	N13-4

SCAN signals

OUTPUT	PLAY	SLOW FWD	SLOW REV	STILL	PAUSE		PIN NO.
LED 1	L	H	L	H	L	H	N21-3
LED 2	H	L	L	H	L	H	N21-2
LED 3	L	L	L	L	H	H	N21-1
	EACH LED IS TURNED ON.					ALL LED OFF	

LED drive signals

Fig. 24 CONT BOARD INPUT/OUTPUT signals.

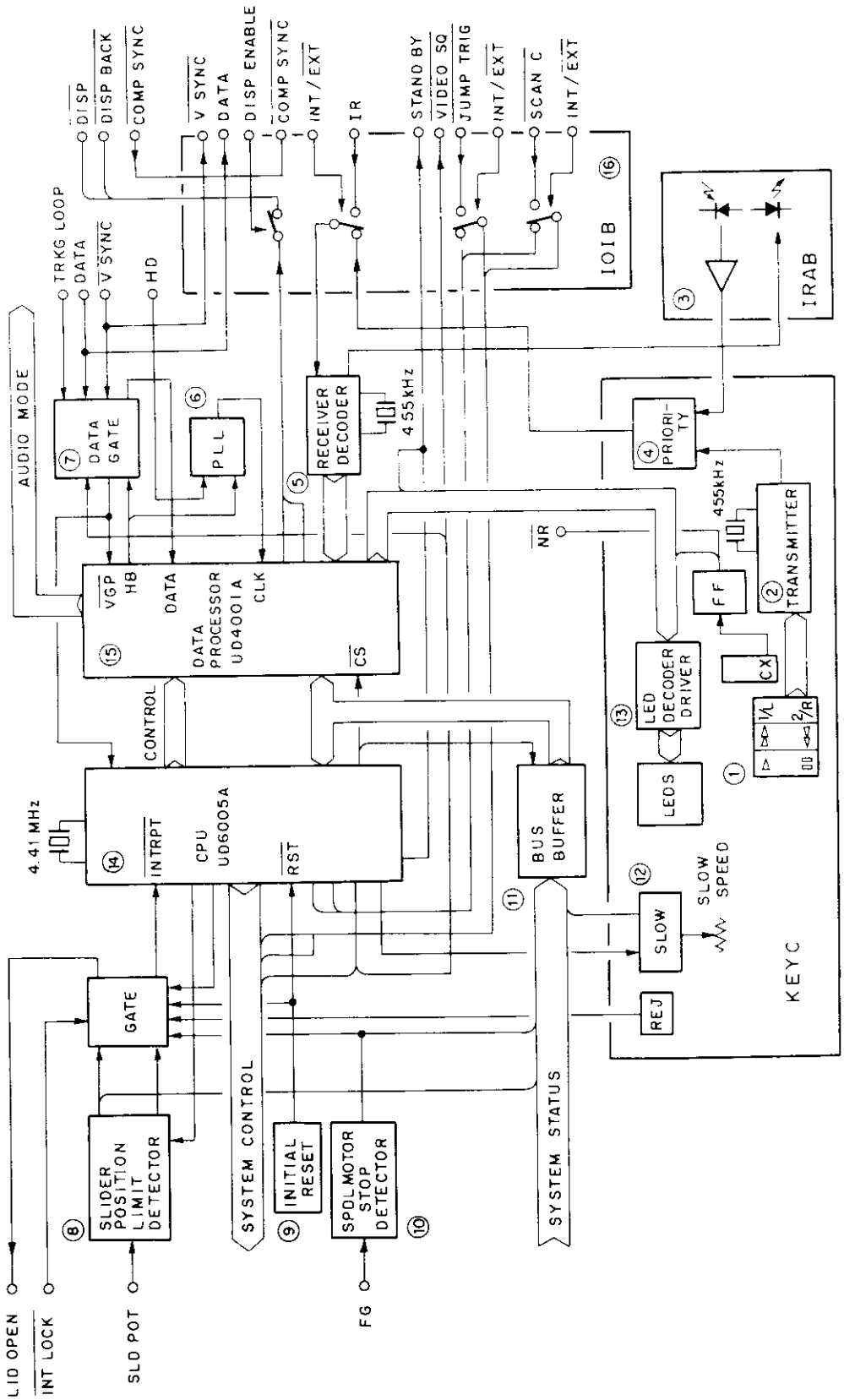
DISP
DISP BACK
COMP SYNC
V SYNC
DATA
DISP ENABLE
COMP SYNC
INT/EXT
IR
STAND BY
VIDEO SQ
JUMP TRIG
INT/EXT
SCAN C
INT/EXT
TRKG LOOP
DATA
V SYNC
HD
AUDIO MODE
DATA GATE
PLL
RECEIVER DECODER
455kHz
PRIORITY
IOIB
IRAB
455kHz
TRANSMITTER
NR
VGP
HB
DATA
DATA PROCESSOR UD4001A
CLK
CS
FF
CX
LED DECODER DRIVER
1/L
2/R
LEDS
CONTROL
4.41 MHz
INTRPT
CPU UD6005A
RST
BUS BUFFER
SLOW
SLOW SPEED
REJ
KEYC
GATE
SLIDER POSITION LIMIT DETECTOR
SYSTEM CONTROL
INITIAL RESET
SPDL MOTOR STOP DETECTOR
SYSTEM STATUS
LID OPEN
INT LOCK
SLD POT
FG

2. Individual Block Descriptions

The way in which each part of the control system operates is described below in reference to the block diagram outlined in Fig. 25.

(1) Key Matrix

Six of the seven operation push-buttons on the front panel of the video disc player (the CX push-button being the exception) constitute a key matrix. Six separate commands can be sent to the transmitter (2) by push-button operation.

(2) Transmitter

The output from the remote control transmitter IC (M50110CP) is obtained by push-button selection of the output from the IC scan signal generator, and subsequent conversion of the returning signal into a 10-bit serial PCM encoded signal. Although this IC output signal is obtained in the form of a 10-bit PCM code amplitude modulated by the 38kHz carrier, the 38kHz component is removed by a detector circuit following the IC.

(3) IRAB

This stage receives infrared signals from the remote control section which is equipped with the same kind of transmitter IC as described in (2) above. Hence, the infrared signal from the remote control section following reception and photoelectric conversion in the IRAB photo-detector is detected, shaped, and converted into a 10-bit serial PCM encoded signal which is subsequently passed to the next stage.

(4) Front panel key priority circuit

This circuit ensures priority of the front panel push-button input signals over the remote control unit key input signals. By pushing any of the player front panel operation push-buttons, the gate is switched by utilizing the oscillator action of the IC described in (2) above.

(5) Receiver

This stage contains the remote control reception IC M50117CP). 10-bit serial PCM encoded signals obtained by pressing the player or remote control operation push-buttons are converted to 5-bit parallel binary encoded signals before being passed on to the data processor.

(6) PLL

Consisting of a phase comparator (TC5081AP), a low-pass filter, and a discrete VCO, the PLL stage generates 3.02MHz clock signals for the data processor. The 1/192 divider circuit in the data processor generates an HB signal of the same repetition frequency as the horizontal synchronizing signal, and applies the signal to the phase comparator input. The phase comparator clock serves as the character dot reference for frame numbers etc, it being necessary for the display of this data in the TV screen to be synchronized accurately with the horizontal synchronizing signal. For this reason, this PLL stage is designed to ensure synchronization with the PB H signal from the VSOP.

(7) Data gate

Each type of data detected from the playback video signal is applied to the data gate where the vertical and horizontal synchronizing signals serve as reference signals. Only data in lines 16 and 18 is extracted and subsequently passed to the data processor.

(8) Slider position detector

The DC voltage from the slider pot is applied to two separate comparators as slider position data, this data being used to detect each inside and outside limit position.

(9) Reset control circuit

The CPU is protected against power reductions by means of a "reset control" which involves detection of drops in the V_{DD} voltage.

(10) Spindle rotation detection

The SPDL motor FG output is integrated and then passed to a comparator as motor rotation data, thereby fulfilling one of the conditions for opening the player lid.

(11) Input buffer

This input buffer serves as the CPU extended input port buffer for storage of status information received from various parts of the player.

(12) Slow timer

The NE555 and the slow speed VR plus capacitors mounted on the KEYC circuit board operate as a MMV for slow motion speed settings.

(13) LED driver

The driver and decoder employed to operate the front panel indicator LEDs.

(14) CPU

The CPU used in this video disc player is an 8049 series NMOS IC incorporating a 2kbyte program ROM plus a 128 byte scratch-pad RAM. The operating clock frequency is 4.41MHz. The CPU is connected to the data processor via an 8-bit data bus. Control signals are transferred between this IC and the servo system in accordance with player operating mode. When a control signal from the 16-bit output port is passed to the servo system according to the prescribed timing, a corresponding response is detected.

The CPU also performs arithmetic operations during search mode on the basic of frame data and address data sent from the data processor.

(15) Data processor

This IC is a 42-pin NMOS IC with an operating clock frequency of 3.02MHz. The four major functions are listed below.

1. Decoding of the Philips code extracted from the playback video signal.
2. Storage of the above data.
3. Character display control.
4. 8-bit x 2 port processing.

The Philips code decoder catches the leading edge of the 500kHz Philips code by 3.02MHz scanning and subsequently detects the frame no., chapter no., time no., and the various mode flags. This data is then passed on to the CPU.

The data storage RAM stores data from the reader and designated data from the CPU in 20 byte units.

The display output stage generates outputs at the prescribed position synchronized by the horizontal synchronizing signal in accordance with CPU directions and with 3.02MHz as the display clock.

(16) IOIB

The IOIB is the interface between the PR-8210-A and external controller. Signals are sent and received through the 24-pins connector on the rear terminal board. The following system information signals are output from the PR-8210-A.

- $\overline{\text{COMP SYNC}}$ (#4)
  Sync signal separated from the video signal
- DATA (#2)
  Frame data separated from the video signal
- $\overline{\text{V SYNC}}$ (#1)
  Vertical sync signal separated from the $\overline{\text{COMP SYNC}}$
- $\overline{\text{VIDEO SQ}}$ (#3)
  Command that prohibits the video signal from being sent to the TV set
- STAND BY (#5)
  Command that lights the stand-by indicator

The following signals are input from the external controller together with each INT/EXT (the internal and external control switching signal).

- REMOTE CONT (#10)
  The serial code signal for the various operation commands
- $\overline{\text{JUMP TRIGGER}}$ (#12)
  Command that activates track jump
- SCAN C (#6)
  Command that determines the direction of track jump and scan

DISPLAY (#8) is the command that prohibits sending the display characters to the TV screen. Pins of #13-#24 are connected to ground.

3. Software

The computer software employed in the control of the video disc player includes two monitor programs called the Begin-End monitor and the Playback monitor. (See Fig. 26)

(1) Begin-End monitor (Fig. 27)

- Used in monitoring player operations and status up until a picture is obtained in the TV screen after the power has been switched on. This monitor is also involved in control operations if the need arises.
- When the reject button is pressed during play mode, and the user removes the disc from the player, this monitor program also ensures that these steps are performed safely.

(2) Playback monitor (Fig. 28)

- Used in player control to ensure proper playback mode according to the pressed operation push-button.
- Also used in player control to support playback control where normal playback is not possible.

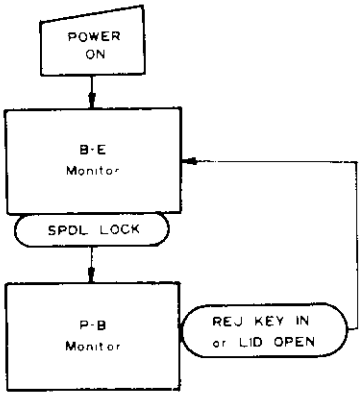

Fig. 26 B-E monitor and P-B monitor

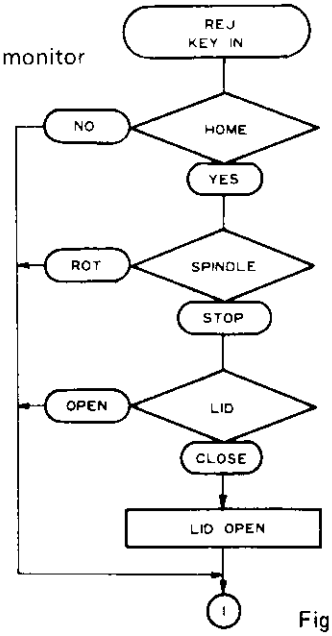

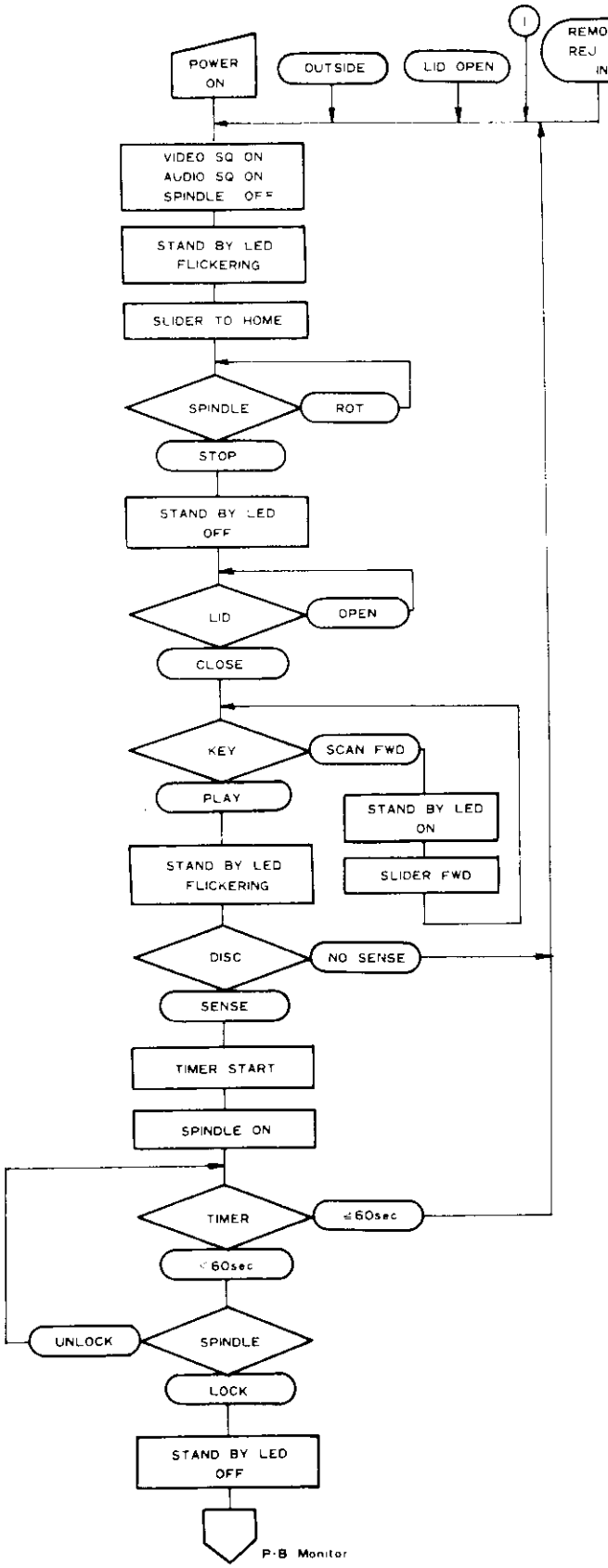

Fig. 27 Flow chart of B-E monitor

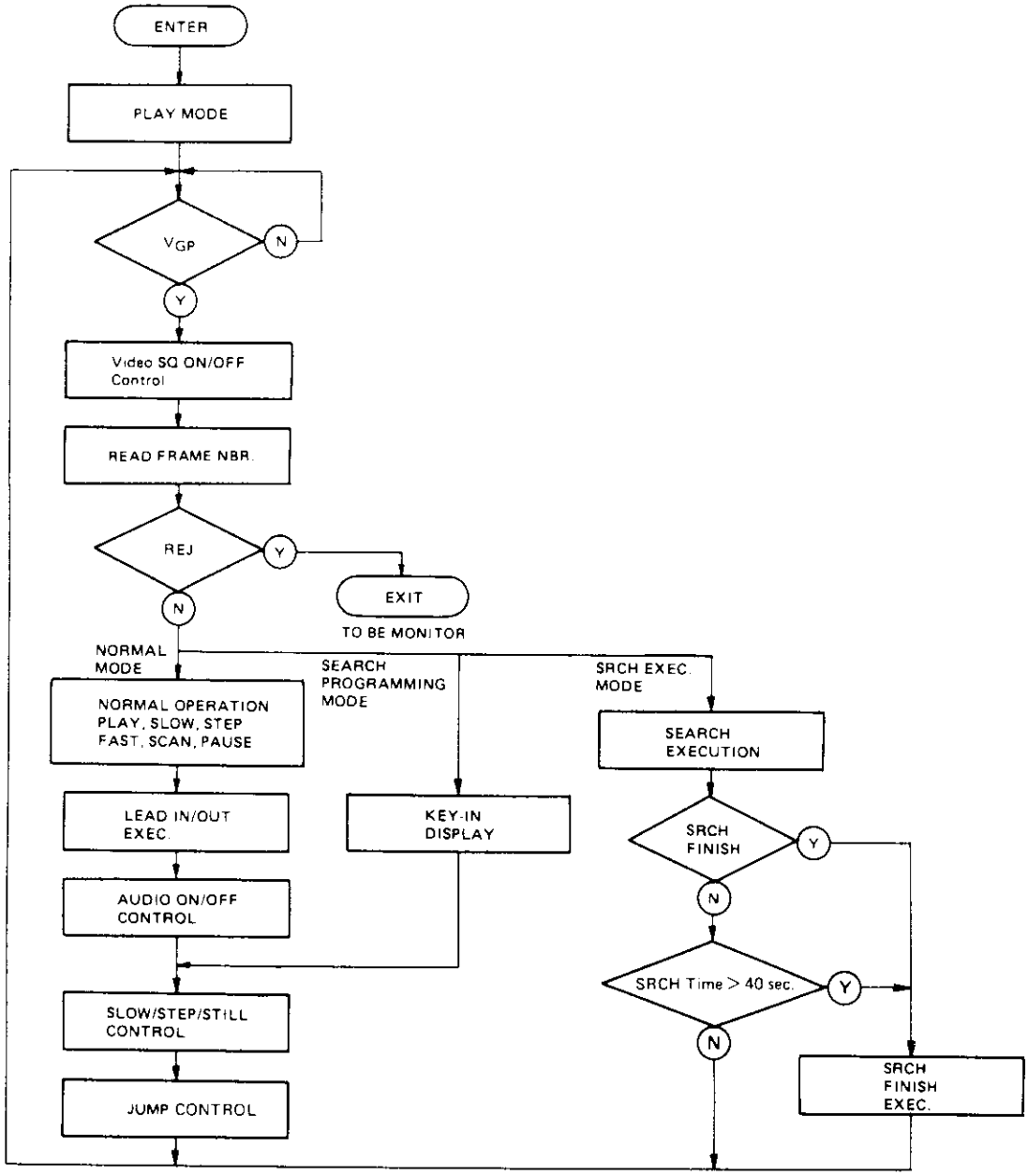

Fig. 28 Flow chart of P-B monitor

Control operation in each playback mode

Control operations during STILL/STEP and FAST X3 modes are shown in the Fig. 29. The left side of the illustrates which track the pick-up is positioned on, and the right side gives the timing sequence of jumps triggering the changes of the video field reproduced on the TV screen.

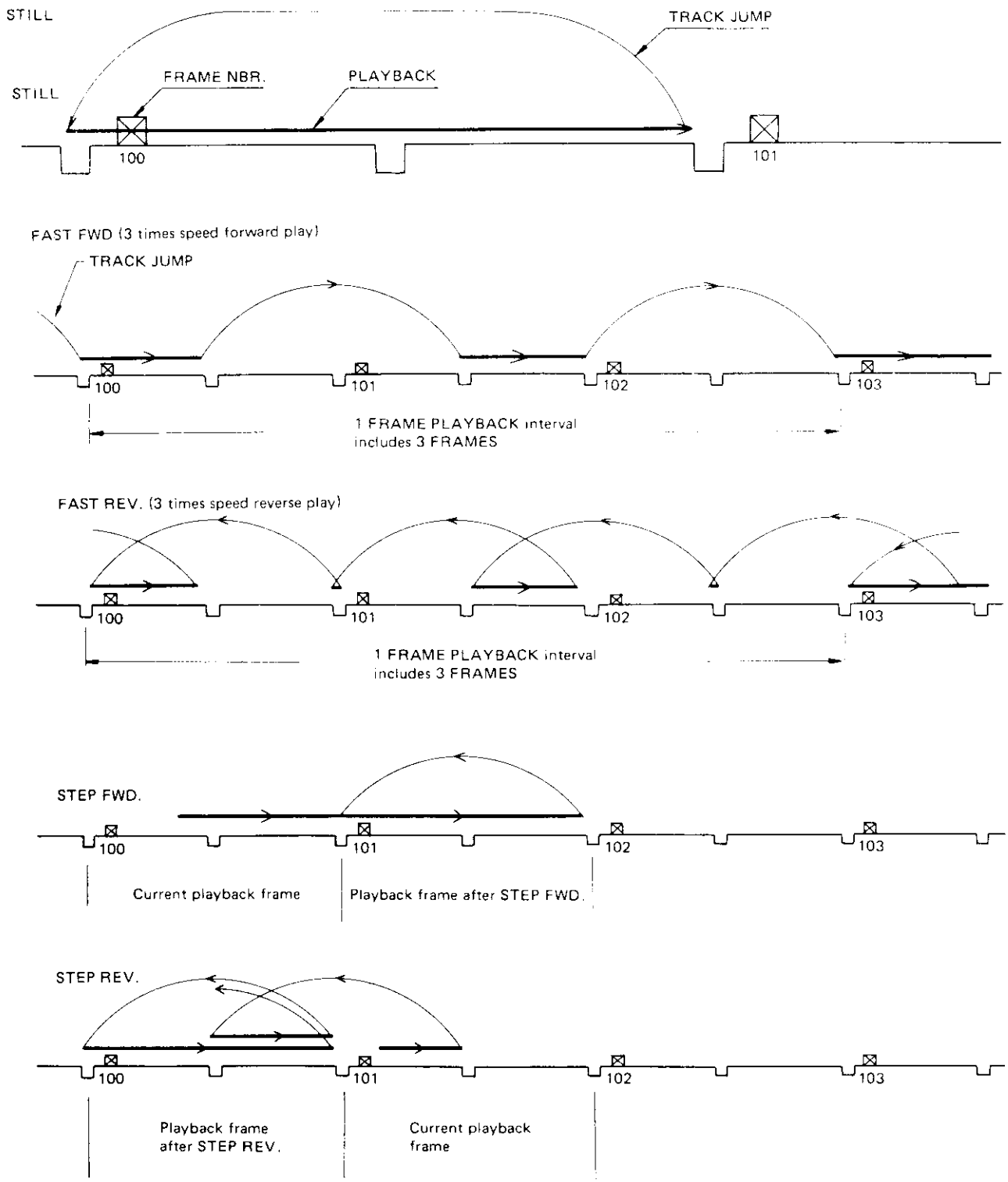

Fig. 29

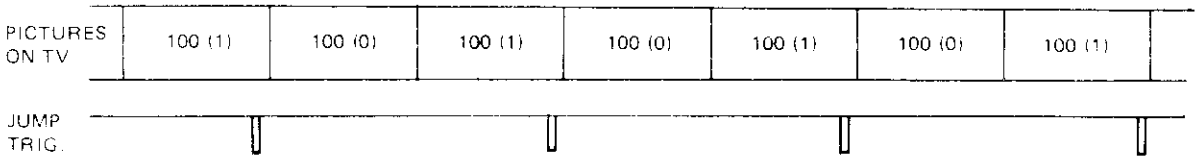
PICTURES ON TV
100 (1)
100 (0)
100 (1)
100 (0)
100 (1)
100 (0)
100 (1)
JUMP TRIG.

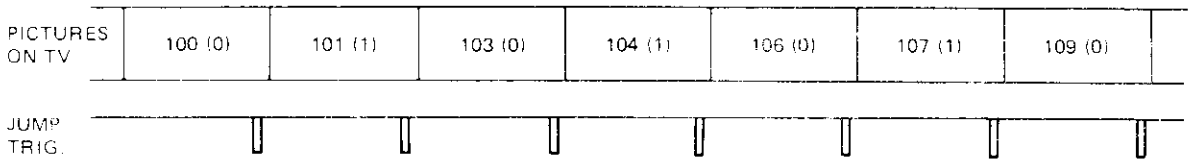
PICTURES ON TV
100 (0)
101 (1)
103 (0)
104 (1)
106 (0)
107 (1)
109 (0)
JUMP TRIG.

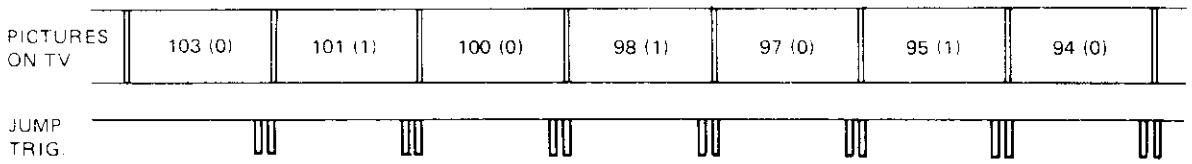
PICTURES ON TV
103 (0)
101 (1)
100 (0)
98 (1)
97 (0)
95 (1)
94 (0)
JUMP TRIG.

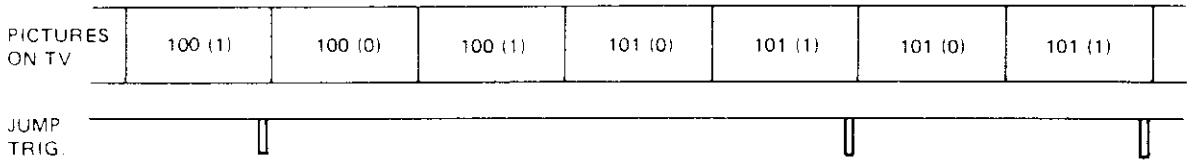
PICTURES ON TV
100 (1)
100 (0)
100 (1)
101 (0)
101 (1)
101 (0)
101 (1)
JUMP TRIG.

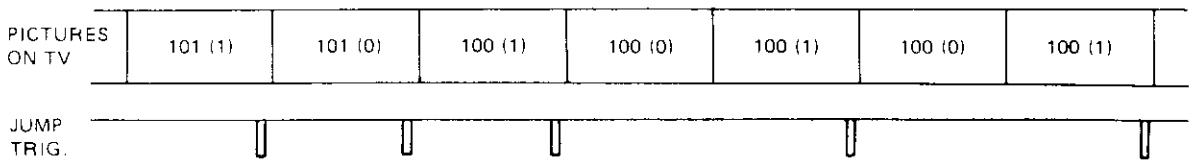
PICTURES ON TV
101 (1)
101 (0)
100 (1)
100 (0)
100 (1)
100 (0)
100 (1)
JUMP TRIG.

Search operation

The fig. 30 shows the method of search operations, and with the pick-up positioned on frame number 2,000, uses the search procedure to frame number 1,000 as an example.

Example: Sequence followed during search from present position #2,000 to #1,000

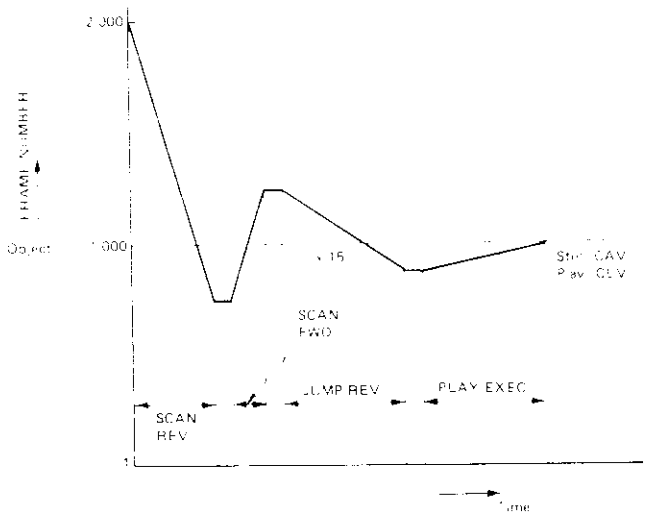

Fig. 30 An example of search operation

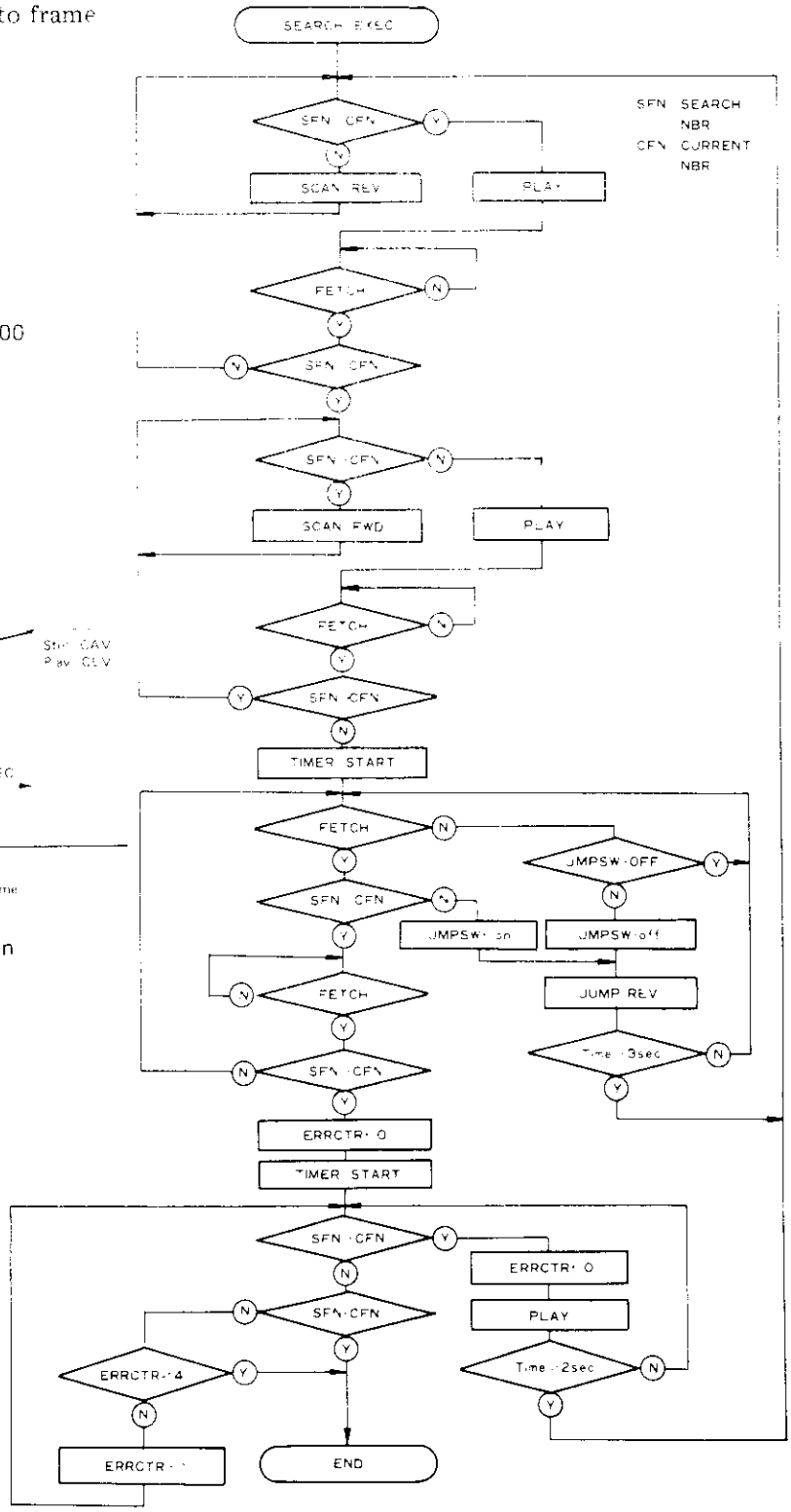

Fig. 31 Flow chart of search operation

1. Positive transition in center of bit cell represents logical "1"s. Negative transitions in the center of bit cell represents logical "0"s.
2. Rise and fall times = 225 ± 25 nsec. (10 - 90%)

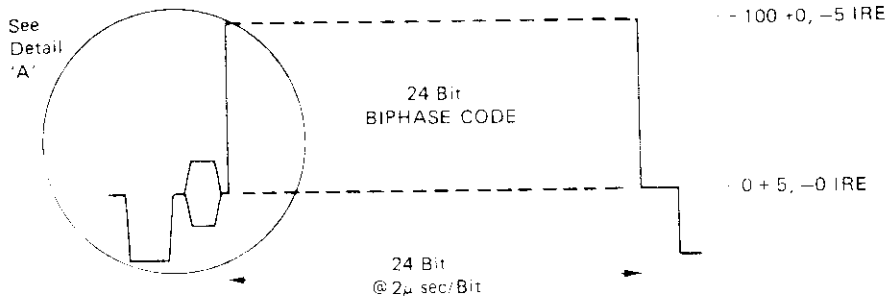

Bits value	Hexadecimal
0000	0
0001	1
0010	2
0011	3
0100	4
0101	5
0110	6
0111	7
1000	8
1001	9
1010	A
1011	B
1100	C
1101	D
1110	E
1111	F

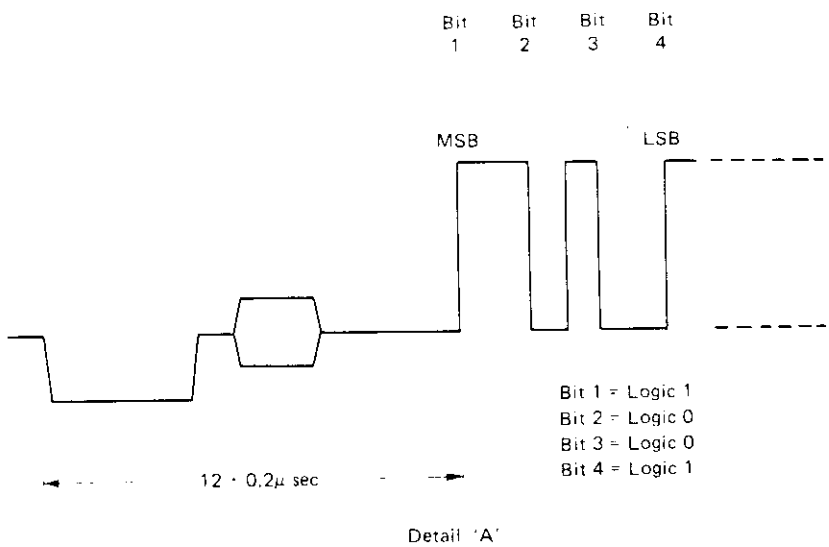

Fig. 32 Specification of the Philips code signal specification

Philips Code Specification

ITEMS	CODE	LINES	REMARKS
LEAD-IN	88FFFF	17H, 18H 280H, 281H	to indicate where the tracks are starting
LEAD-OUT	80EEEE	17H, 18H 280H, 281H	to follow immediately after the end of the active program
FRAME NUMBER (CAV)	$FX_1X_2X_3X_4X_5$	17H, 18H	$1 \leq X_1X_2X_3X_4X_5 \leq 79{,}999$
PICTURE STOP	82CFFF	279H, 280H	
CHAPTER NUMBER	$8X_1X_2DDD$	281H	$1 \leq X_1X_2 \leq 79$
CONSTANT LINEAR VELOCITY (CLV)	87FFFF	280H	
PROGRAM TIME NUMBER (CLV)	$FX_1DDX_2X_3$	17H, 18H	X_1 indicates the hours X_2, X_3 indicates the minutes

5-8 SERIAL CODE

The PR-8210-A can be controlled by the front panel keys, remote control unit or external controller. The commands and data drom these sources are all encoded into a serial code of the same format and sent to the CONT board. This format is shown in fig. 33.

The format is a continuous pattern beginning with the fixed code "0", "0", "1" followed by D0, D1, D2, D3, and D4 to indicate the contents and ending with the fixed code "0", "0". "0" has the LOW interval width of 1.05 msec. and "1" has of 2.11 msec. The relationship between the D0-D4 codes and the commands and data is shown in the table.

TABLE

CODE D0	D1	D2	D3	D4	CODE NAME
0	0	0	0	1	x3 PLAY FORWARD
0	0	0	1	0	SCAN FORWARD
0	0	0	1	1	SLOW FORWARD
0	0	1	0	0	STEP FORWARD
0	0	1	0	1	PLAY
0	0	1	1	0	x3 PLAY REVERSE
0	0	1	1	1	SCAN REVERSE
0	1	0	0	0	SLOW REVERSE
0	1	0	0	1	STEP REVERSE
0	1	0	1	0	PAUSE
0	1	0	1	1	SEARCH
0	1	1	0	0	CHAPTER
0	1	1	0	1	AUDIO 2/R
0	1	1	1	0	AUDIO 1/L
0	1	1	1	1	REJECT
1	0	0	0	0	0 (Numeral)
1	0	0	0	1	1
1	0	0	1	0	2
1	0	0	1	1	3
1	0	1	0	0	4
1	0	1	0	1	5
1	0	1	1	0	6
1	0	1	1	1	7
1	1	0	0	0	8
1	1	0	0	1	9
1	1	0	1	0	FRAME

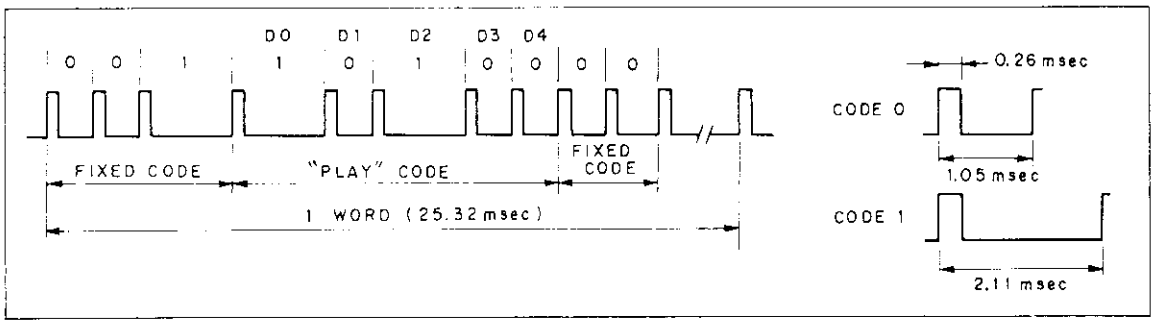

Fig. 33 Format of serial coded data.

5-9 LSPS

Voltage vs. current characteristic of the laser tube is anagolous to that of a voltage regulator like thyratron. An ignition voltage of 7 to 9kV must be applied between its anode and kathod to ionize the Neon gas filled in the laser tube.

Once the laser has started to light, less voltage is required to maintain the lighting compared with ignitting term. And the voltage between the anode and the kathod is settled to a constant voltage of 1,150vdc. It doesn't depend on the value of current flow.

All Laser Power Supply circuit except laser tube and ballast resistor is concentrated on the LSPS board (VWR-011). Voltage multiplying rectifier which has been employed in PR-7820 and VP-1000 is not employed in this model. Instead of that, an ignition transformer is adopted to obtain the ignition voltage. Both this transformer and a secondary voltage doubler are enclosed in a case with resin mold, and mounted on LSPS board as IG block.

In this ignition form, IG block is only activated until the laser starts lighting. In the player stand-by term as the laser-lighting is not necessary and in the lid opening term as the laser should not be lighting, it is easy to turn the laser off by electrical controling of the LSPS. Therefore, the laser tube is prolonged it's life, also a beam shutter mechanism becomes unnecessary.

Laser tube and LSPS circuit are shown in Fig. 37.

When the PLAY key is depressed after the power is turned on, $\overline{\text{LASER ON}}$ signal is applied to pin 12 of the LSPS from CONT board. It turns the output of the inverter consist of Q1 to "high", therefore the darlington-connected Q4, Q5 are turned on. Consequently, the multi-vibrator consist of Q2, Q4, Q5, D5, D6, R14, R17, C9 and C10 starts to oscillate. The oscillation frequency is concerned by the time constant of R14/C9 and R16/C10, and is about 20kHz. The output of the multi-viblator passes through the darlington-connected Q6, Q7, and drives the primary winding of the ignition transformer. DC voltage of around 8 to 10kV (peak value) appears on the output of secondary voltage doubler, and is impressed to the anode of the laser tube.

On the other hand, around 2,100Vdc appears on the output of the voltage doubler with 775Vac inputs. That voltage is varied by the line voltage. Q10 is turned on by $\overline{\text{LASER ON}}$ signal, then discharge current is ready to flow. On the order of 3ms or less while ignition voltage is impressed, the laser tube starts lighting, and the discharge current flows. Due to this, Q9 is reverse-biased by the voltage-drop on R31, Q3 is turned on, and oscillation of the multi-viblator is stopped. Accordingly, the operation of IG block is stopped.

At the same time, the discharge current is stabilized to 5mA by Q10, C7, C8, R7 connected in series between collector and emitter of Q10 operate for reducting the ripple on the discharge current and the serge voltages. R1 to R6 connected in parallel among each C1 to C6 of the voltage doubler equalize the voltage applied on each capacitor, and prevent reverse-charge for those by the discharge current when the power is turned off.

When the laser doesn't start lighting notwithstanding impression of ignition voltage by deterioration of the laser tube, Q9 is turned off by the output of the level detector consist of D7, D8, C11, C12, Q8, etc. And the oscillation of the multi-viblator is stopped. Q9 is turned on again on the order of 1 sec or less, the oscillation of the multi-viblator will re-start, and the operation of the ignitting will be repeated.

Fig. 37 LSPS block diagram

6. SAFETY CHECK

N

Before returning this
make sure all shields,
are in place, and inter
lid switch are funct
places of caution labe
law.

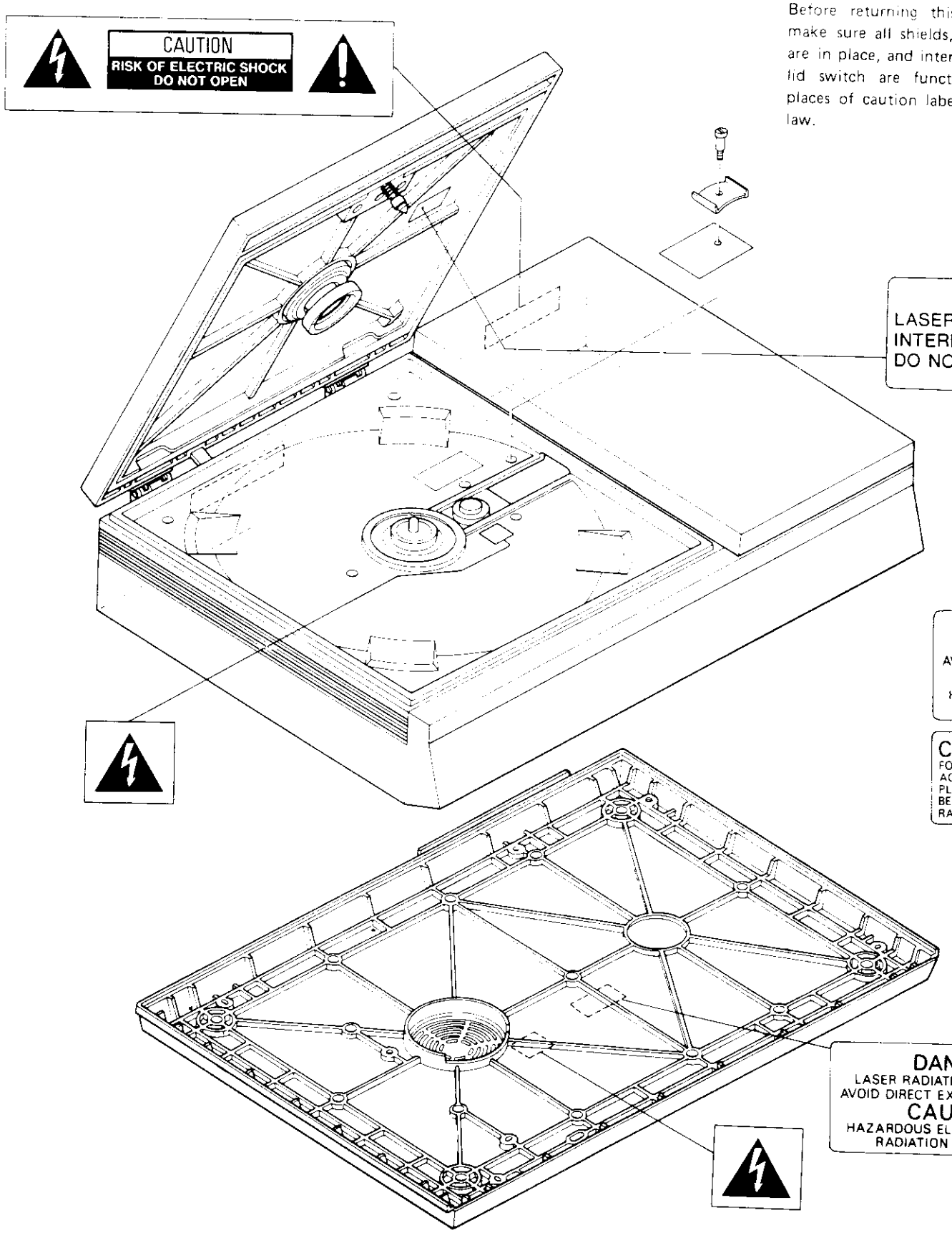

4 5 6

NOTE:

ing this player to the customer, shields, barriers, covers, and labels nd inter-lock system of the lid, and e functioning properly. Attaching ion labels are based on the federal

A

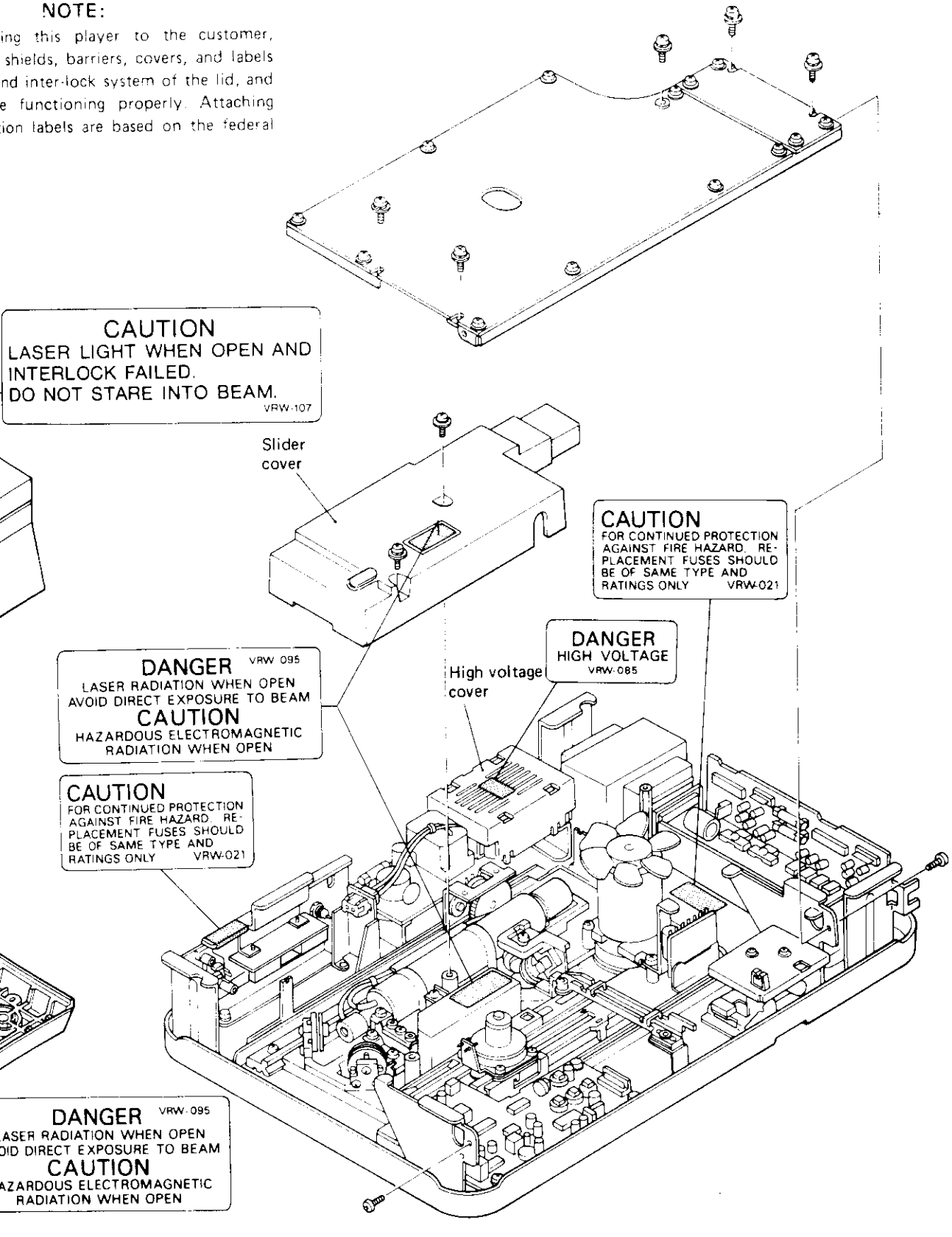

B

C

D

7. MECHANICAL ADJUSTMENTS

7.1 SLIDER DRIVE MECHANISM

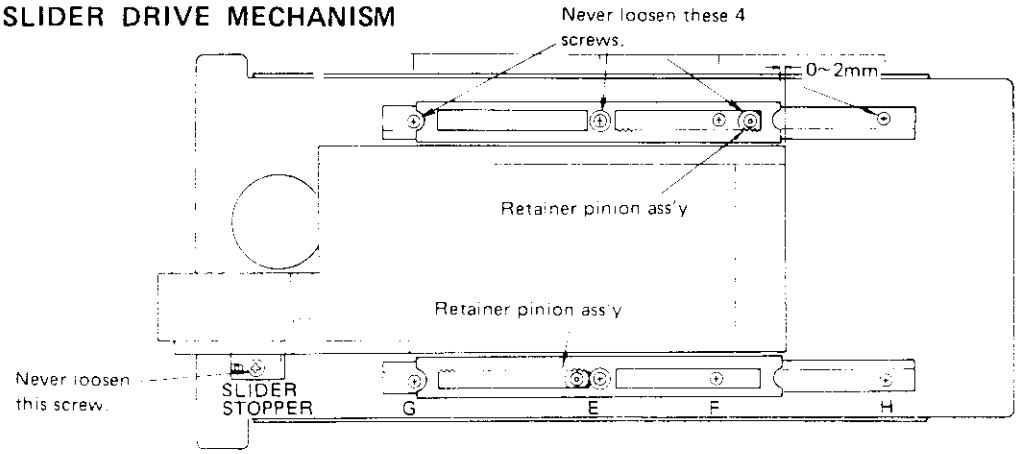

Retainer positioning

(1) While pressing the slider against the slider stopper, posit the right edge of the both retainer to 1—2mm left of the right end of the slider.
(2) Apply "screw lock" to the threads of the retainer pinion ass'y, and attach both retainer pinion ass'y as illustrated in the drawing.

Rail fixing

(1) Slide the slider about in the middle of the rail.
(2) Make sure 4 retaining screws (E, F, G and H marked) holding the underside rail in the drawing are loosely attached.
(3) With pressing the middle of the underside rail in the drawing against the slider, firmly tighten the 4 screws in sequence E through H.
(4) After the screws are tight, move the slider back and forth and check for smoothness of the operation.
(5) Make sure there is no gap between the slider and rails.
(6) Put a drop of "screw lock" on each of the 4 screws.

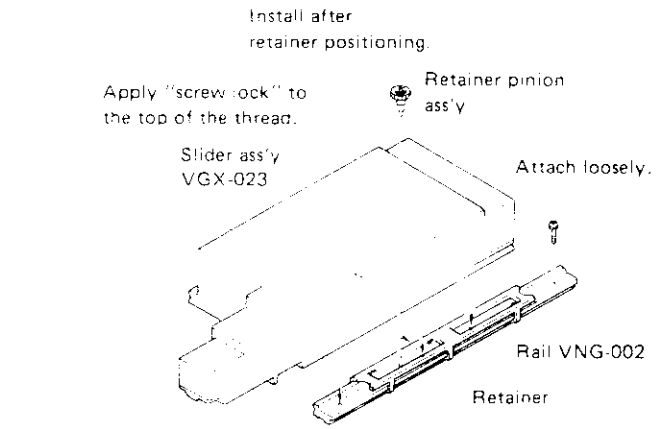

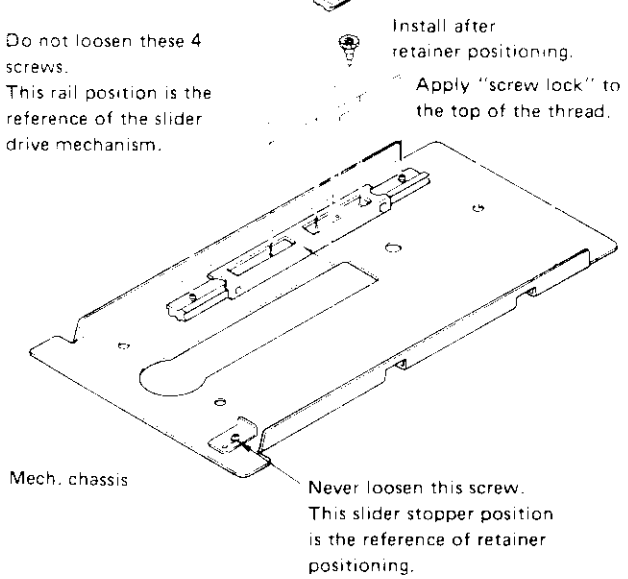

Installing directions of each roller is as described below.
Never install in different direction.

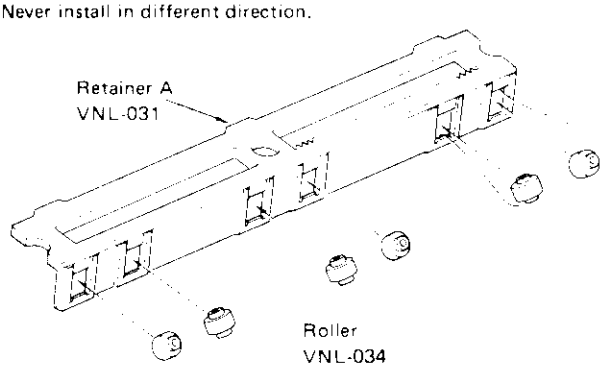

7.2 POSITIONING OF POTENTIOMETER PINION GEAR

Pinion gear positioning

With lightly pressing the slider against the slider stopper, adjust the mark of pinion just above by idling the pinion gear.

Pinion gear lock

After the pinion positioning, rotate the socket set screw clock-wise direction until the end of the screw touches lightly to the potentiometer holder, next screw back one full rotation, then apply screw lock around the screw.

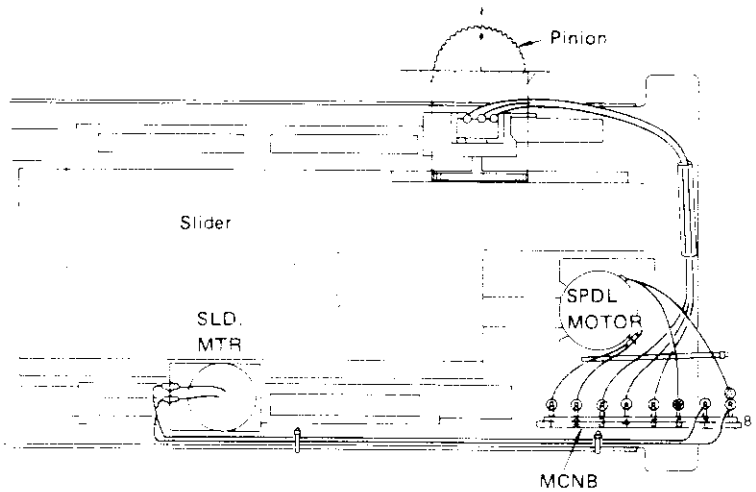

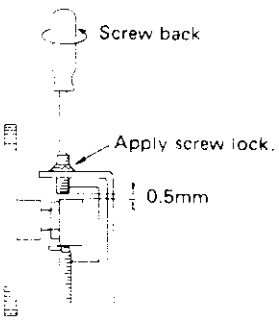

7.3 SPINDLE MOTOR HEIGHT

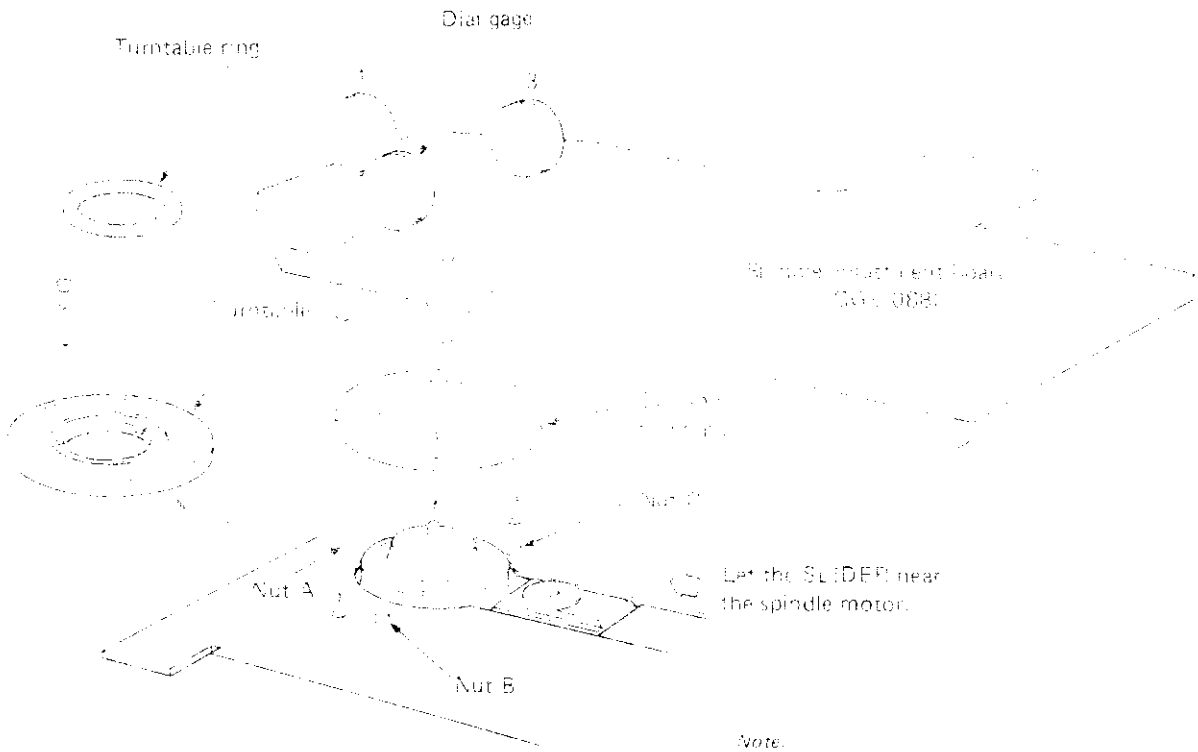

Note:
GGV-088 consists of adj. board and dummy turntable.

ADJUSTMENT PROCESS

1) Rotate an outer dial of gages so that a pointer reads − 0.1 when pin-probe is freed.
2) Remove an under-housing, a lid, a turntable, a top-housing.
3) Set the adjustment board as illustrated.
4) Rotate nut C so that a pointer of gage 3 reads 2.55.
5) Rotate nut B so that a pointer of gage 2 reads 2.55.
6) Rotate nut A so that a pointer of gage 1 reads 2.50.
7) Repeat step 4) thru 6) to obtain above readings.
8) Tighten lock screws and verify the readings satisfy the followings.
   Gage 1: 2.45±0.05 (mm)
   Gage 2, 3: 2.50±0.05 (mm)
   Tightening lock screw causes gage-reading to lower approx. 0.05 mm.
9) Apply lock-tite around lock screws.

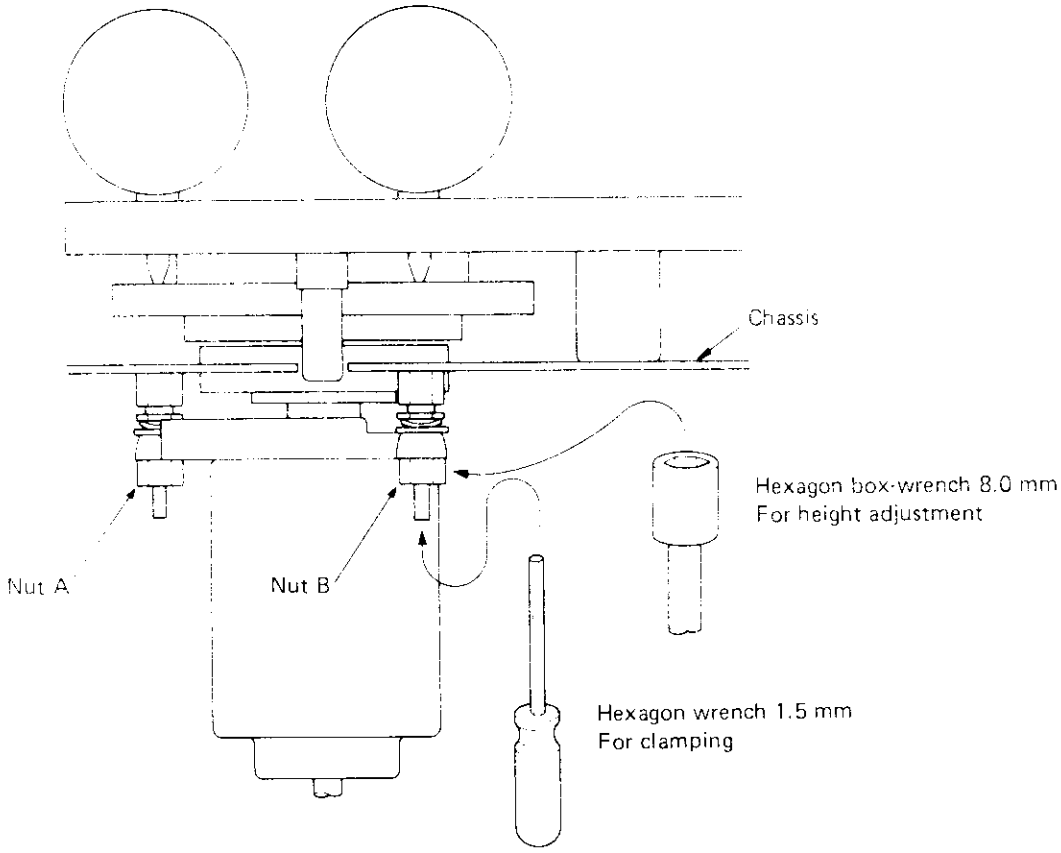
Chassis
Hexagon box-wrench 8.0 mm
For height adjustment
Nut A
Nut B
Hexagon wrench 1.5 mm
For clamping

READING

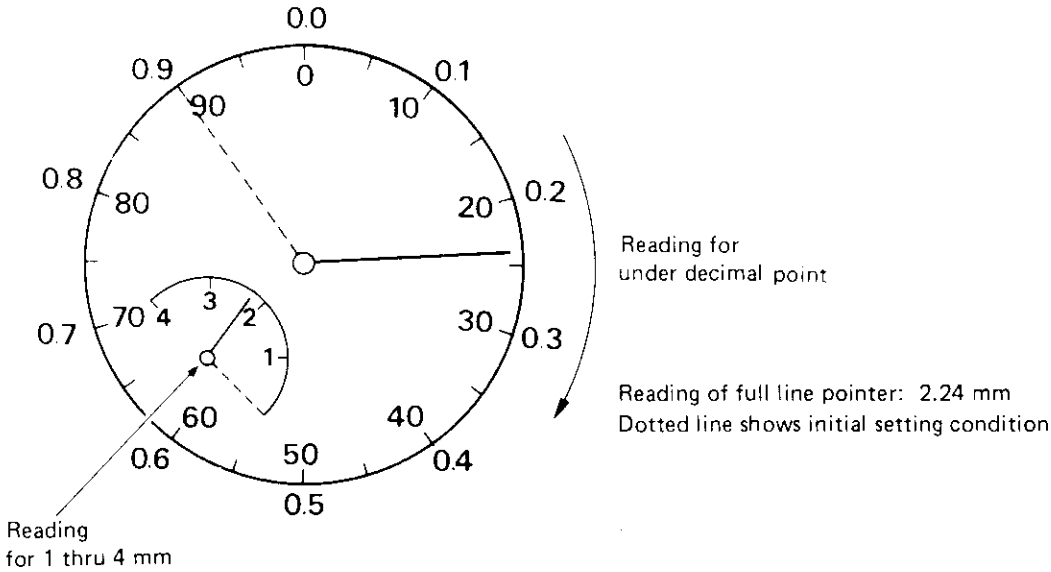
0.0
0
0.1
10
0.2
20
0.3
30
0.4
40
0.5
50
0.6
60
0.7
70
0.8
80
0.9
90
1
2
3
4
Reading for
under decimal point
Reading of full line pointer: 2.24 mm
Dotted line shows initial setting condition
Reading
for 1 thru 4 mm

8. SLIDER ASSEMBLY AND ALIGNMENTS

All parts replacement and optical axis adjustments must be performed with the slider detached from the mech. chassis.
Prior to the slider assembly and alignment, detach the following parts from the slider base.

- Slider cover
- Shield cover
- Racks
- Laser tube
- 1st fixed mirror
- 2nd fixed mirror
- Grating
- DG lens
- 1/4 wave plate

Necessary jigs and tools

- Slider stand
- First optical axis adjustment jig (First fixed mirror adjustment)
- Power meter (Laser power measurement)
- Second optical axis adjustment jig (Second fixed mirror adjustment)
- Polarization adjustment jig (Polarization adjustment)
- Vertical jig (Tracking ass'y adjustment)
- Tracking adjustment driver A (Tracking ass'y adjustment)
- Tracking adjustment driver B (Tracking ass'y adjustment)
- Grating adjustment driver
- Grating adjustment driver 1
- Grating adjustment driver 2
- Static jig
- Static jig
  Stand A
  Moveable reflecting mirror
  Amp. jig
- Position sensor jig (DG lens adjustment)
- Laser power supply jig (ILPS)
- Dual trace oscilloscope
- Audio signal generator (Tracking ass'y aging)
- Rotation jig

1. Laser tube preparation

Ballast resistor preparation

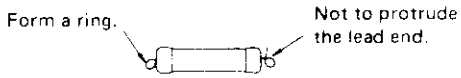

Vinyl tube preparation

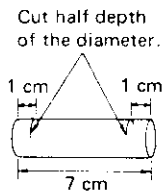

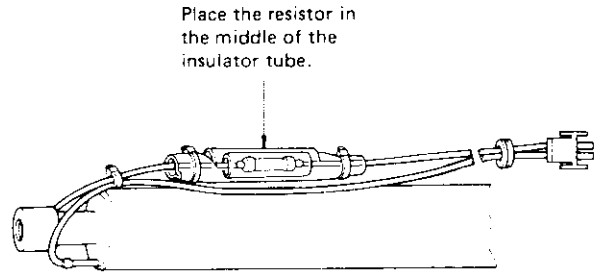

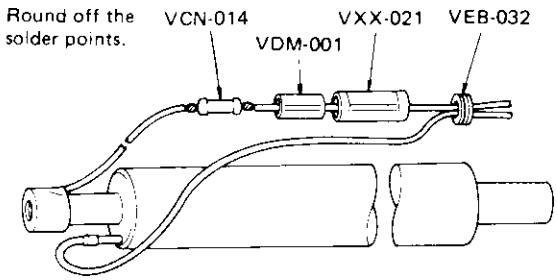

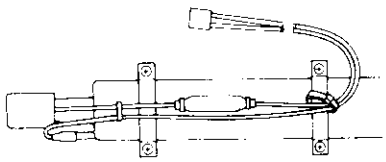

Bind the high voltage wires and the holder lightly.

2. Assembling laser tube onto the slider base

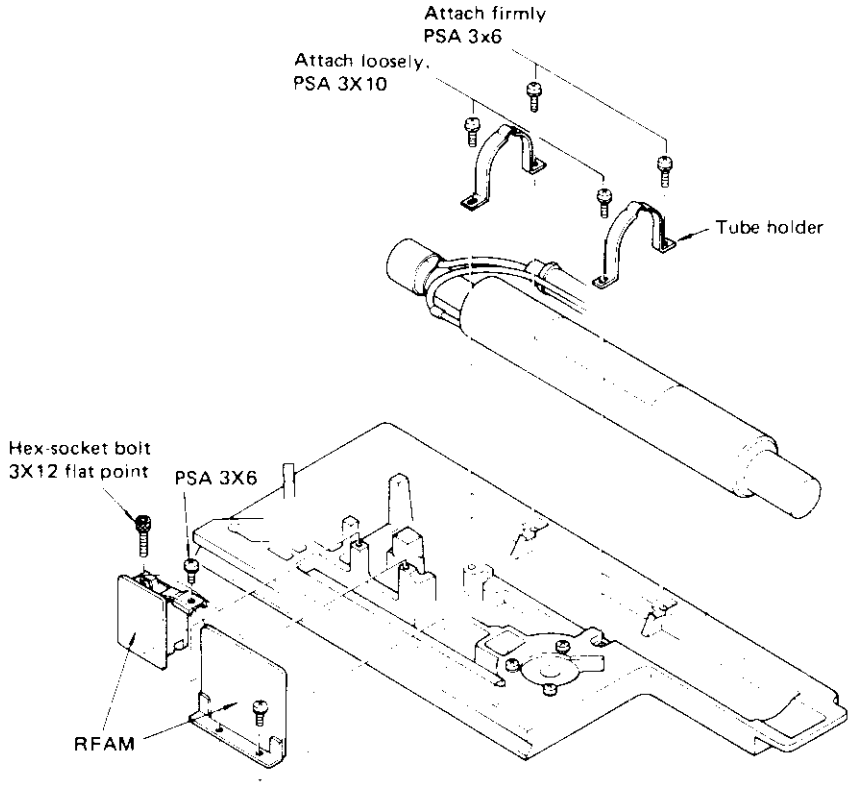

3. Polarization adjustment

(1) Place the slider on the rotation jig and lock it down.
(2) Set the pick-up of polarization adjustment jig in place.
(3) Connect the laser tube to laser power supply, turn the power on and light up the laser.
(4) Rotate the laser tube to the point where the powermeter reading is lowest and lock the laser tube by fixing screws down.

NOTE:
Make sure the laser tube can't be rotated after it is locked down. After installation, recheck the polarization adjustment.

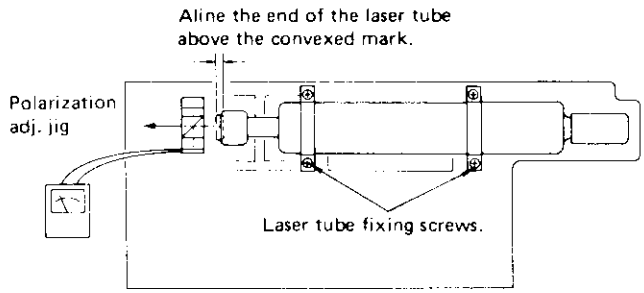

4. First fixed mirror adjustment

(1) Attach the fixed mirror.
(2) Set up the first optical axis adj. jig.
(3) Adjust the hex. socket set screws (refer to the illustration below) until the beam passes thru the pin-hole.

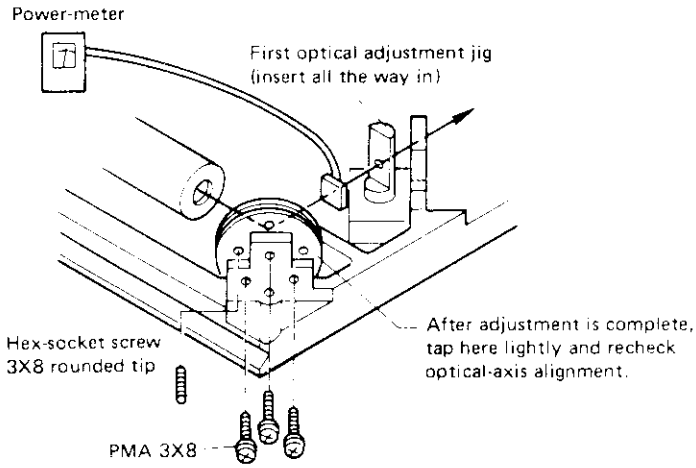

(4) After the adjustment, confirm that the laser power at the position noted in the drawing measures 0.9mW to 1.6mW.

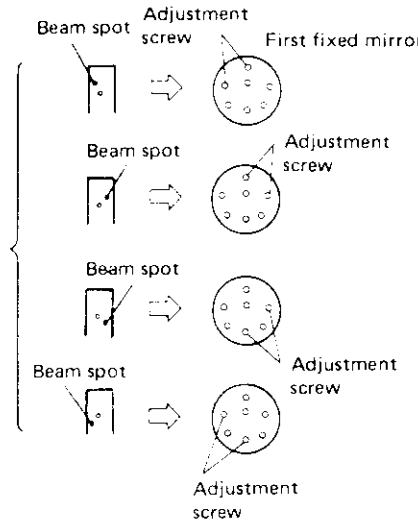

5. Second fixed mirror and grating adjustment

(1) Attach the second fixed mirror.
(2) Adjust the hex. socket adjustment screws behind the mirror so that the beam passes through the pin-hole of second optical axis adj. jig. The relation between the beam spot and the screws is same as the first fixed mirror adjustment.
(3) Tap the back of the second fixed mirror lightly and recheck the optical axis.
(4) Attach the grating.
(5) Insert the grating adj. driver into the opening for the adjustment, then engage the grating driver with the cog of the grating.
(6) Adjust the grating by rotating the grating driver so that the first order beam falls on the scratch line of the jig.
(7) Installation of the grating will throw the zero order beam off a bit. Readjust second fixed mirror.
(8) Repeat steps (6) and (7) until the following conditions are met.
- The zero order beam passes through the pin-hole of the jig.
- The first order beam falls on the scratch line of the jig.

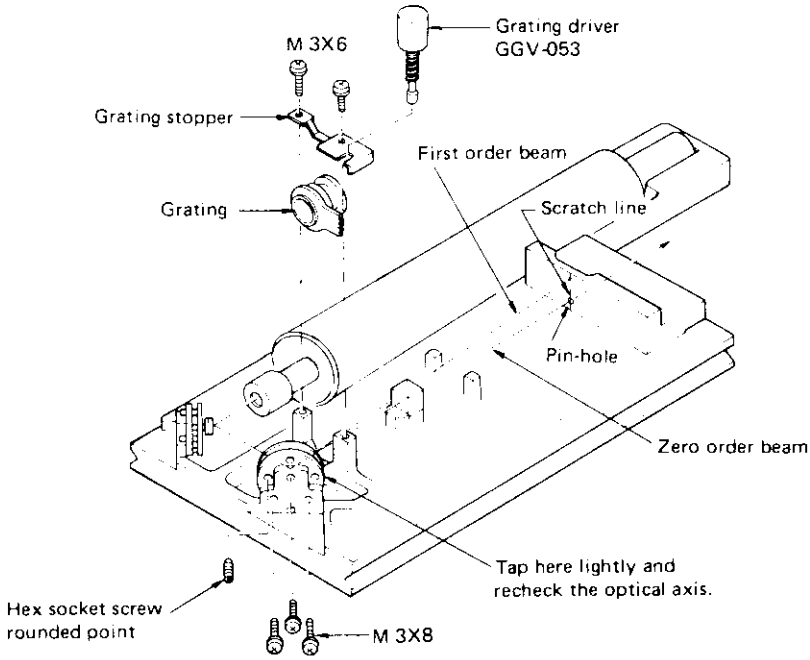

6. Tracking ass'y mounting

(1) Detach the objective lens and the stopper base from the focus motor.

NOTE:
Do not put any object into the gap.

(2) Attach the tracking ass'y.

NOTE:
When you exchange the tracking ass'y, new one must be re-aged before the adjustment for several hours with the slider base side up.
(Using 50Hz sin wave, 150mA)
CAUTION:
Do not leave the slider with the components side up for more than 15 minutes.
(The slider with the components side up is illustrated in the drawing below.)

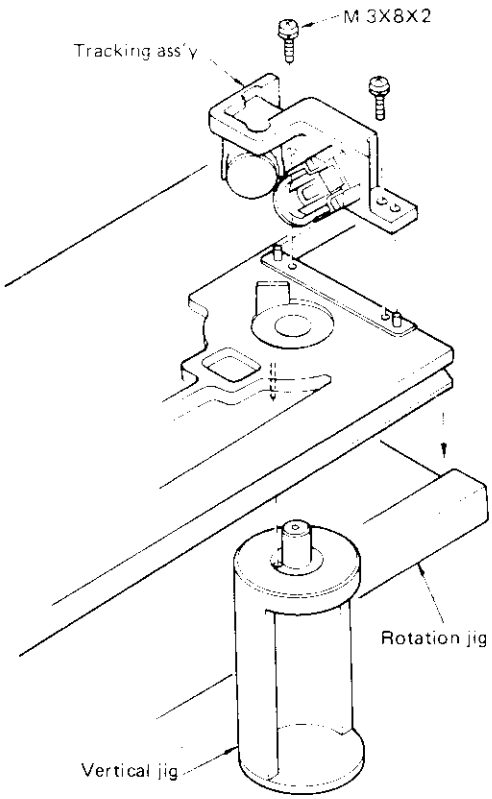

7. Tracking ass'y adjustment

1. Tracking mirror adjustment

(1) With the set screw lightly tightened, use the two adjustment drivers to move the mirror axially and radially, and adjust so that the beam passes through the upper pin-hole in the vertical jig.

(2) Next, using the two adjustment drivers, bring the beam onto the vertical center line on the lower pin-hole and temporarily tighten the screw.

2. Tangential mirror adjustment
With the set screw lightly tightened, use the two adjustment drivers and adjust the mirror axially and radially until the beam falls on the horizontal center line relative to the pin-hole. (Refer to Fig. B) Check and make sure the beam cleanly passes through the upper and lower pin-holes.
3. Screw down the set screws a bit and recheck the optical axis.
4. Repeat the steps listed in 1., 2. and 3. until the beam cleanly passes through the upper and lower pin-holes.
5. After the adjustment, screw down the two set screws at a clamping torque of 6kg·cm - 8kg·cm.

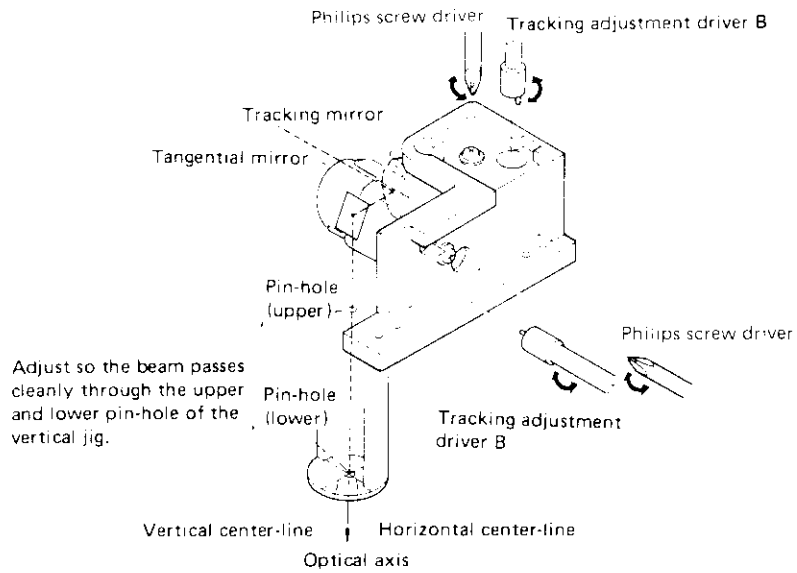

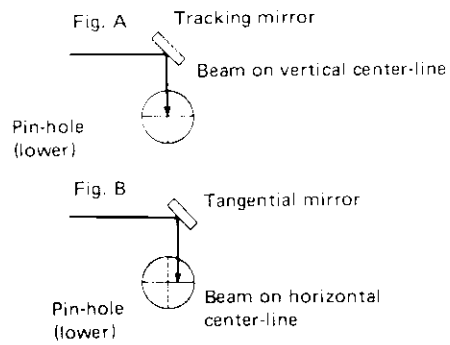

8. Optical axis adjustment with the slider base side up

(1) Press the lever of the rotation jig and turn the whole slider unit over. Leave it alone in that posture for over one minute.
(2) Insert the tracking driver B into the point illustrated in the drawing and slowly rotate in the direction of the arrow while observing the optical axis. Stop when the beam cleanly passes through the upper pin-hole.
(3) Make sure the set screws for the tangential and tracking mirror are tight enough.
(4) Press the lever of the rotation jig and bring the slider unit back.

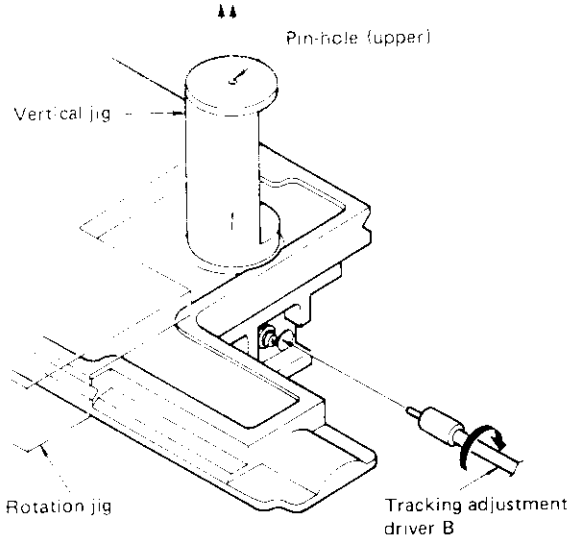

9. Diversing lens and 1/4 wave plate mounting

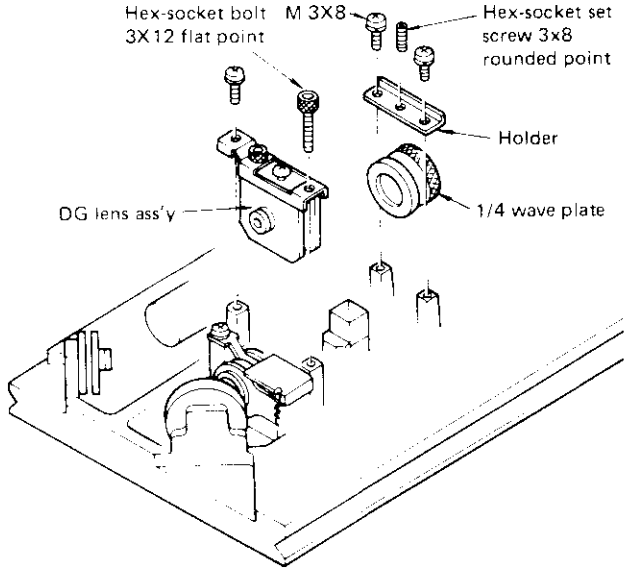

10. Diverging lens adjustment

(1) Press the lever of the rotation jig and turn the slider unit over.
(2) Set the oscillo scope into X-Y mode, and connect the output of position sensor jig as illustrated in the drawing.
(3) Set the sensor into the center hole of the magnetic circuit.
(4) Turn the DG adjustment screws (hex. socket head screw) so that the beam spot on the oscilloscope screen comes on the center of the screen.
(5) Tap the * marked portion of the rotation jig lightly, and readjust the DG adjustment screws.
(6) Repeat the steps listed in (4) and (5) until the displacement of the optical axis doesn't occur.
(7) After the adjustment, detach the sensor from the slider.

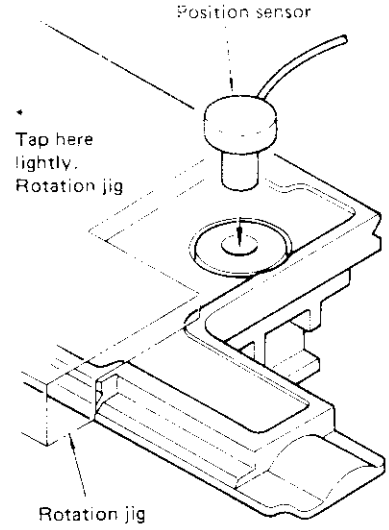

BLOCK DIAGRAM OF POSITION SENSOR JIG

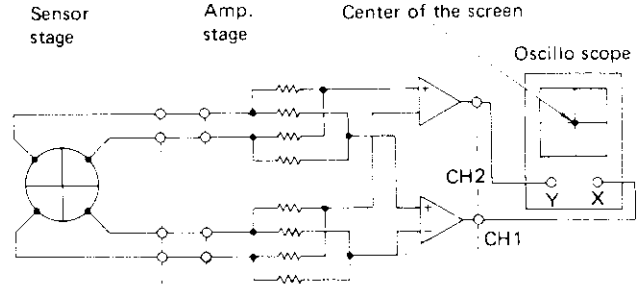

11. Objective lens mounting

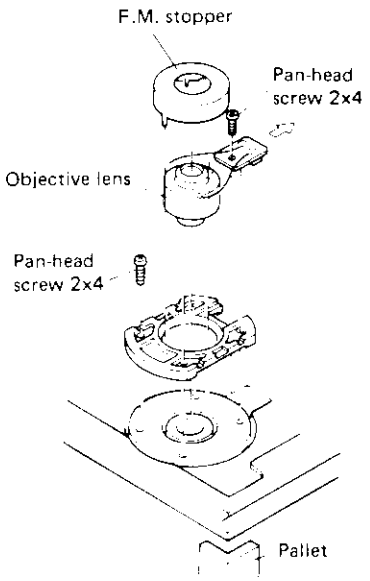

12. Check of stain on the optical parts

(1) Press the lever of the rotation jig and turn the slider over.
(2) After lighting the laser, put an orange colored paper under the objective lens, observe the projection of the beam on the paper.
(3) If the beam is projected unevenly, first blow the dust on optical parts by an air blower, wipe the optical parts off by a piece of cleaning paper wetted with the following abstergent.
  Objective lens: Mixture of fron and ethanol
  Grating: Pure fron (Don't wipe off grated side)
  Other optical parts: Mixture of fron and ethanol

CAUTION:
Do not clean transducer mirrors.

13. Photo detector positioning and 1/4 wave plate adjustment

Preparation

(1) Mount the slider on the static jig (stand A) and lock in place.
(2) Prepare amp. jig, laser power supply and a dual trace oscilloscope, and connect them as shown in the connection diagram.

NOTE:
There is no connecting post for housing N-4 in old static jig. Therefore, it is necessary to modify the connector stand on the jig.

Adjustment

(1) Turn on the power of the amp. jig and light on the laser.
(2) Adjust the height of the moveable reflecting mirror, so the reflected beam focuses on the photo detector.
(3) Set the function SW of the amp. jig to position 3, for observing the levels of TRKG A and TRKG B.
(4) Adjust the photo detector position to make absolute value of TRKG A and TRKG B equal by turning the PD adjustment screws.
(5) Fine adjust the height of the moveable reflecting mirror to make TRKG A and TRKG B levels maximum.
(6) Repeat the steps (4) and (5) once or twice.
(7) Set the function SW of the amp. jig into position 2 for observing the waveform of focus error.
(8) Turn on the 300Hz OSC SW of the amp. jig to drive the moveable reflecting mirror.
(9) Rotate the output VR of the 300Hz OSC in CW direction until a dip appears on the peak points of the focus error waveform.
(10) Rotate the 1/4 wave plate to obtain maximum focus error.
(11) Fine adjust the PD position to obtain maximum focus error.
(12) Repeat above adjustment steps (3) to (11) until maximum focus error is obtained.
(13) This adjustment result should meet the following criteria.
  - Focus error peak to peak value: more than 5.3V
  - The difference between value A and value B: within 10% of peak to peak value.
  - TRKG A and TRKG B should be approximately same level (absolute value).

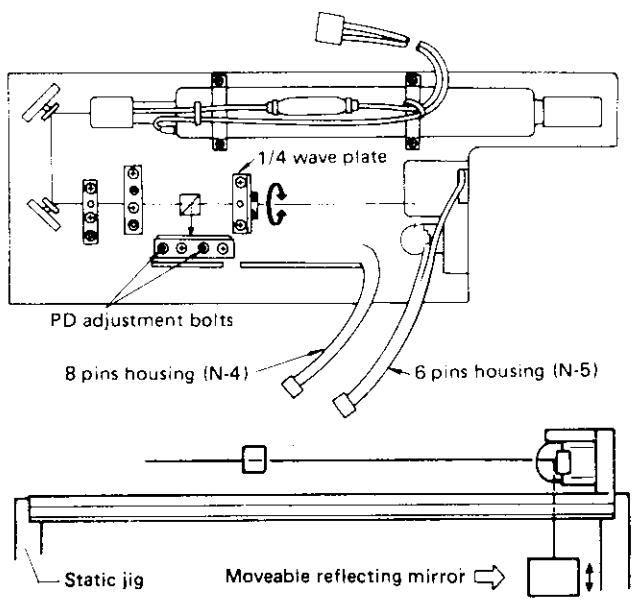

FIG. Connection diagram for the PD positioning and 1/4 wave plate adjustment.

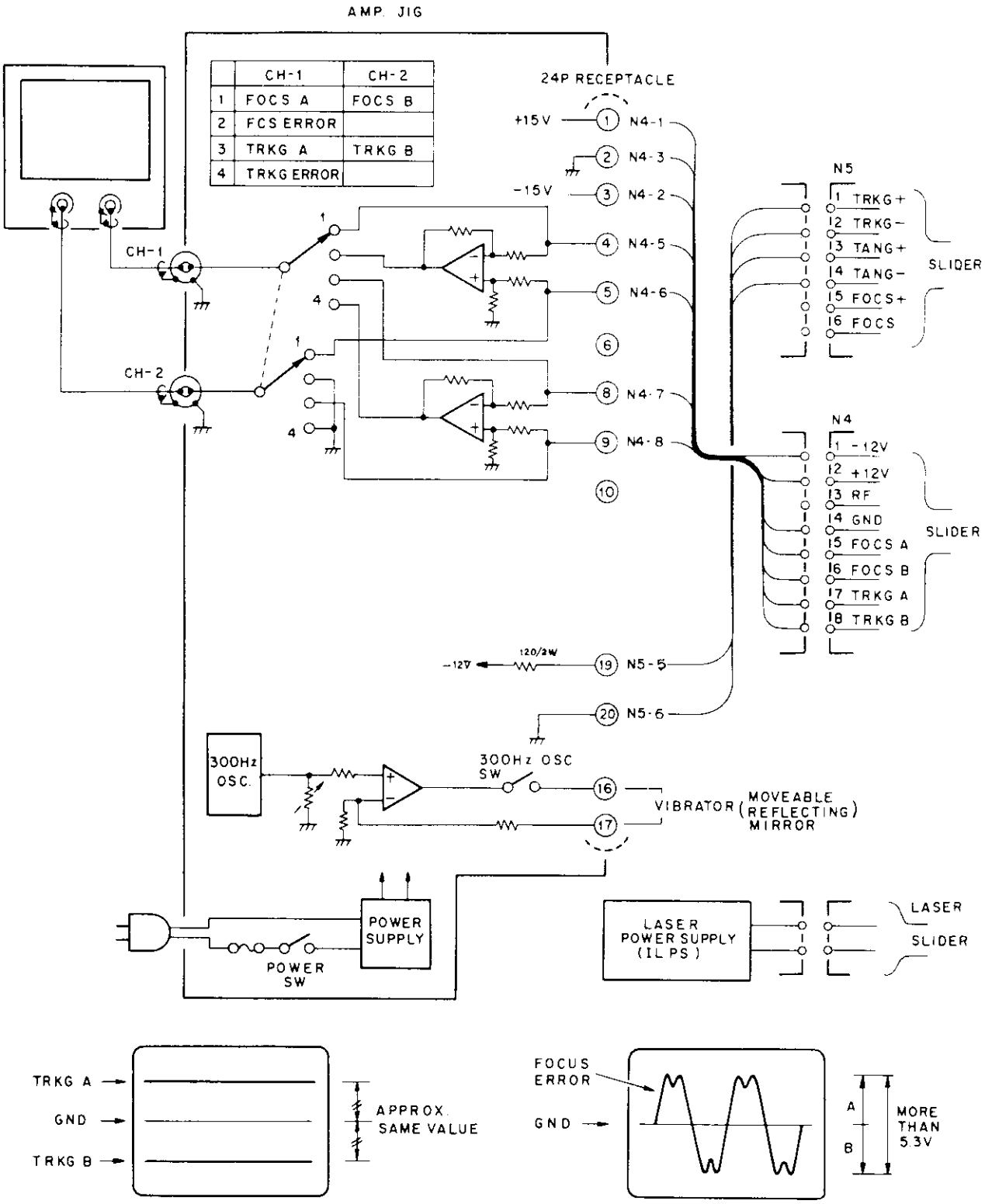

14. Finishing

(1) Apply "screw lock" to the following points.

- Fixed mirrors — 4 points of set screws; Hex. socket adjustment screws (4 ea.)
- DG lens — Hex. socket bolts (2 ea.)
- 1/4 wave plate — Hex. socket set screw (1 ea.)
- Photo detector — Hex. socket bolts (2 ea.)
- Racks — End of screws (6 ea.)

(2) Attach all of the detached parts.

(3) Always keep the objective lens upturned and lens cap attached.

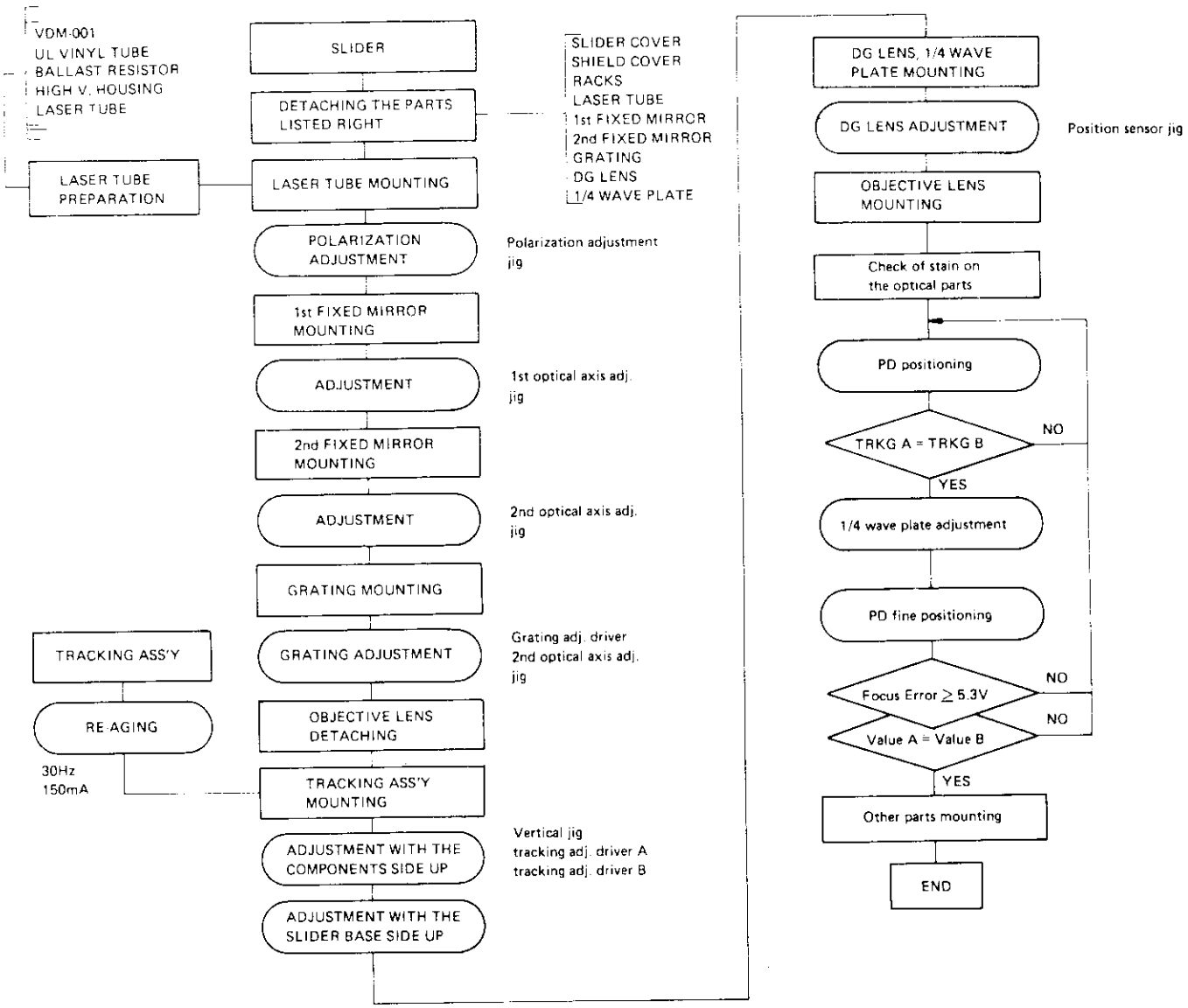

9. ELECTRICAL ADJUSTMENTS

9-1. VSOP ADJUSTMENT

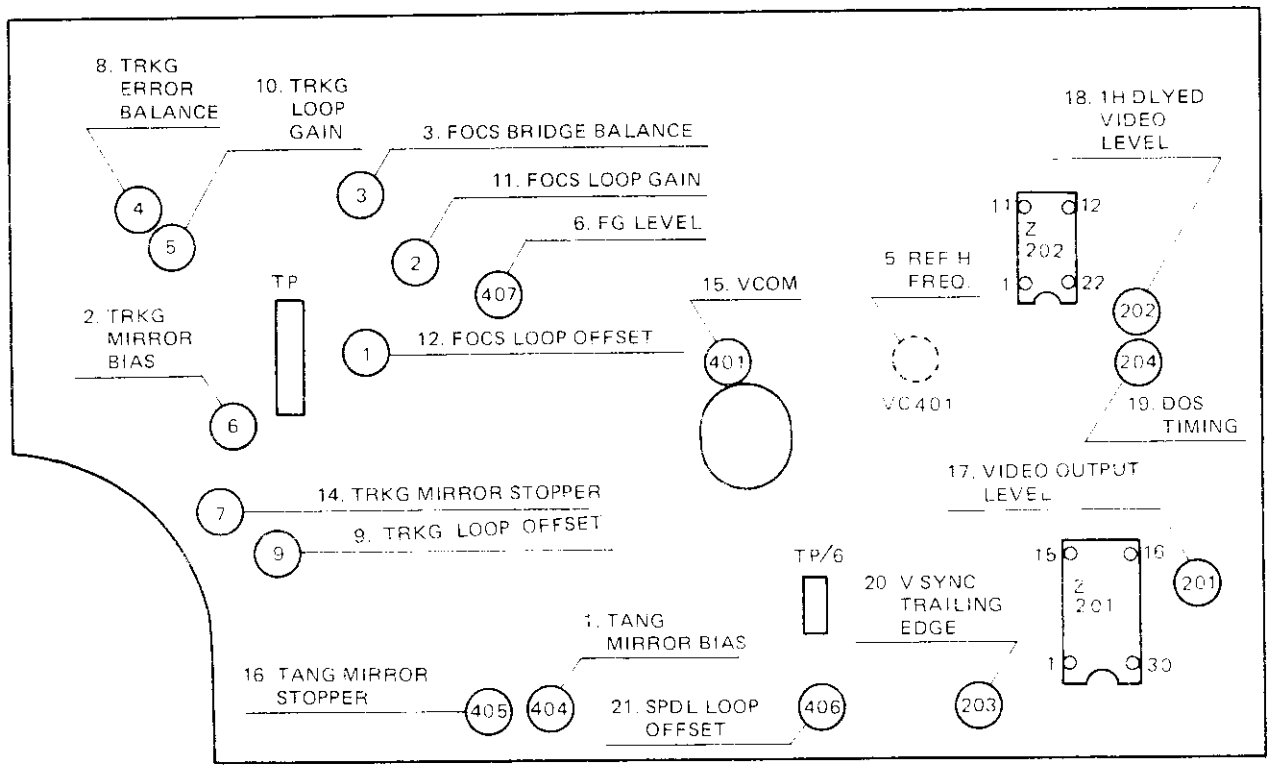

EQUIPMENTS AND TOOLS

- Oscilloscope
- Monitor TV
- Test disc B1
- AF oscillator
- Frequency counter
- 30° player stand
- Extension cables
- Low pass filter etc.

TEST POINT

TP		TP	
1	focus error	1/6	tangential loop control (O/L: connect to GND)
2	osc input (FOCS)	2/6	playback H (PB H)
3	focus bridge balance	3/6	reference H (REF H)
4	GND	4/6	tangential error
5	tracking error	5/6	n.c.
6	osc input (TRKG)	6/6	f.g. level (FG)
7	tracking return		
8	tracking loop control (O/L: connect to GND)		
9	GND		
10	focus drive		
11	RF		
12	tangential return		

PRIOR TO VSOP ADJUSTMENT

- Remove the bottom cover.
- Using the 30° player stand, raise the front of the set.
- Remove the 4 screws on VSOP, then connect extension cables to the test points.
- Install the test disc B1.
- Turn on and hold the inter-lock switch and the lid switch.
- Plug the power cord into a 120V/60Hz outlet.

NOTE:
10:1 probes are used in these adjustments. Scope ranges are shown with the probe in use. However, it may be necessary with some scopes to use a 1:1 probe in X-Y mode to obtain sufficient gain.

WARNING:
EXTREME CARE MUST BE EXERCISED TO LSPS BOARD WHILE WORKING WITH THE PLAYER TO PREVENT POSSIBILITY OF EXPOSING YOURSELF TO DANGEROUS VOLTAGES.

Step No.	Mode	Scope Range	Servo Loop	Test Point No.	Adj. Point	Adjustment and Check Details
						When the adjustment mode is "SET UP", connect pin 1 of PSCB to GND, thereby the +12V and -12V lines on VSOP are activated.
1	SET UP	5mV/div		TP-12	VR404	**• TANG MIRROR BIAS** Verify the voltage at TP-12 is 0 ± 20mV. If not, adjust VR404 to satisfy the above. This step is necessary when VSOP is replaced.
2	SET UP	5mV/div		TP-7	VR6	**• TRKG MIRROR BIAS** Verify the voltage at TP-7 is 0 ± 20mV. If not, adjust VR6 to satisfy the above. This step is necessary when VSOP is replaced.
3	SET UP	5mV/div		TP-10 TP-3	VR3	**• FOCS BRIDGE BALANCE** Connect TP-10 to GND. Measure the voltage at TP-3 (an offset voltage of Z2), then disconnect TP-10 from GND. Adjust VR3 so that the voltage at TP-3 will be 20mV lower than that measured voltage. This step must be finished within one minute after the power is turned on.
4	SET UP	5mV/div		TP-1	VR1	**• FOCS OFFSET INITIAL SET** Verify the voltage at TP-1 is 0 ± 30mV. If not, adjust VR1 to satisfy the above.
5	SET UP			TP-3/6	VC401	**• REF H FREQUENCY** Connect a frequency counter to TP-3/6. Verify REF H frequency is 15734Hz. If not, adjust VC401 to get near the above. If you have an NTSC generator, connect CH-1 of the scope to the H-SYNC OUT of the generator, and also connect CH-2 to TP-3/6. With triggering by CH-1 input, adjust VC401 to stop the current of the waveform in CH-2.

Step No.	Mode	Scope Range	Servo Loop	Test Point No.	Adj. Point	Adjustment and Check Details
6						**• SPDL LOCK CHECK**
	PLAY		TANG O/L TRKG O/L	TP-6/6	VR407	Connect TP-1/6 to GND to make TANG servo loop open. Push PLAY key and scan to middle of the disc. Verify SPDL servo loop has been locked. If not, F.G. level should be adjust. Push REJECT key, then set VR407 to the mechanical center. Again, push PLAY key; as soon as SPDL servo has been locked, adjust VR407 to 1.5V at TP-6/6.
7						**• TRKG ERROR CHECK**
	STILL =14,000	0.1V/div	TANG O/L TRKG O/L	TP-5	GRATING	Verify TRKG error level is more than 2Vp-p. If not, the mounted angle of the diffraction grating must be adjusted. Scan to the point where the slider's hole for grating adjustment comes on the center of the mech. chassis opening, then push STILL key. Insert the grating driver into the opening, then engage the cogs of the grating and driver. While observing TRKG error, adjust the grating angle to find the smooth null point of the waveform. Then rotate the grating driver CCW direction to find the first point where maximum TRKG error with smooth envelope is obtained.

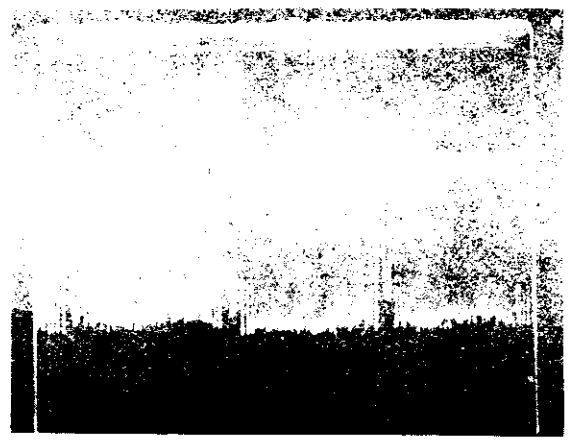

Step No.	Mode	Scope Range	Servo Loop	Test Point No.	Adj. Point	Adjustment and Check Details
8	PLAY #20,000	0.1V/div	TANG O/L TRKG O/L	TP-5	VR4	• **TRKG ERROR BALANCE** Push PLAY key and scan to middle of the disc. With TRKG and TANG servo loop still opened, adjust VR4 to where TRKG error waveform is centered on 0V, or the positive and negative peak amplitudes are same level. 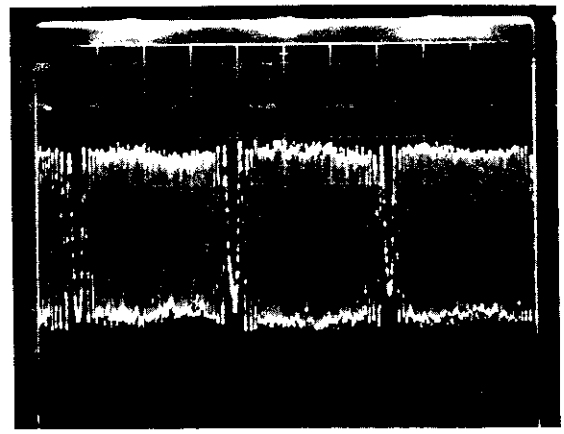
9	PLAY	0.1V/div	TRKG C/L	TP-5	VR9	• **TRKG LOOP OFFSET** Disconnect TP-8 from GND to make TRKG servo loop close. Adjust VR9 to where TRKG error waveform is centered on 0V. 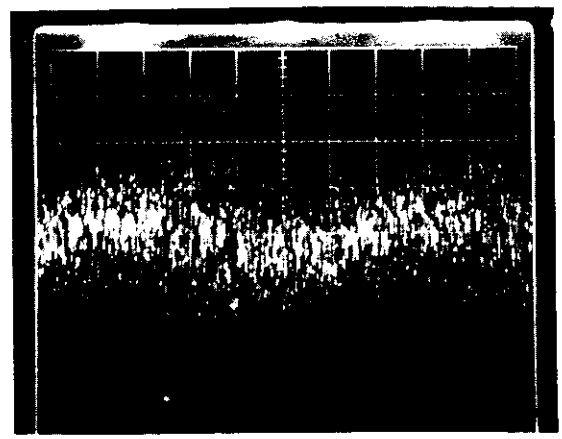

Step No.	Mode	Scope Range	Servo Loop	Test Point No.	Adj. Point	Adjustment and Check Details
10	PLAY ±20,000	CH-X: 0.2V/div CH-Y: 50mV/div	TANG O/L TRKG C/L	TP-6 TP-5	VR5	**• TRKG LOOP GAIN** Disconnect TP-8 from GND. Set the scope into X-Y mode and the AF oscillator output to 4.8kHz (10Vp-p). Scan to middle of the disc. Connect the oscillator output to CH-X and also to TP-6 through a 68kΩ. Connect CH-Y to TP-5. Adjust VR5 to make Lissajous figure into a horizontal ellipse.

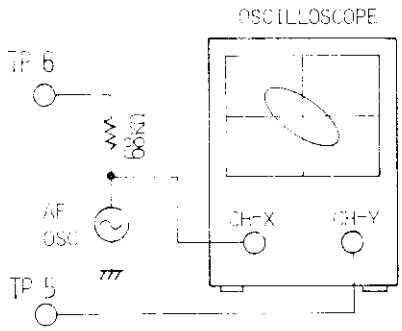

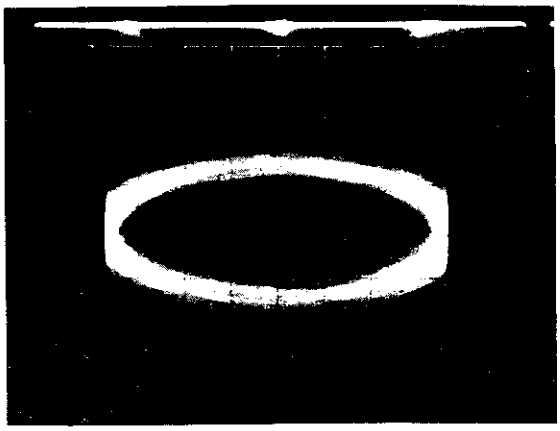

Step No.	Mode	Scope Range	Servo Loop	Test Point No.	Adj. Point	Adjustment and Check Details
11						**• FOCS LOOP GAIN**
	PLAY #20,000	CH-X: 10mV/div CH-Y: 20mV/div	TANG O/L TRKG C/L	TP-2 TP-1	VR2	Set the scope into X-Y mode and the AF oscillator output to 2.4kHz (0.6Vp-p). Scan to middle of the disc. Connect the oscillator output to CH-X and also to TP-2 through a 68kΩ. Connect CH-Y to TP-1. Adjust VR2 to make Lissajous figure into a horizontal ellipse.

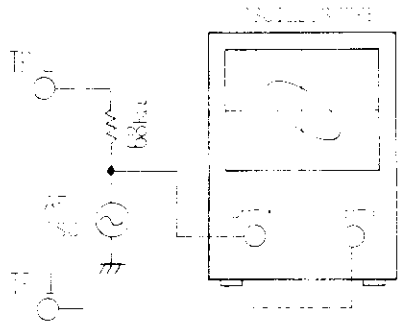

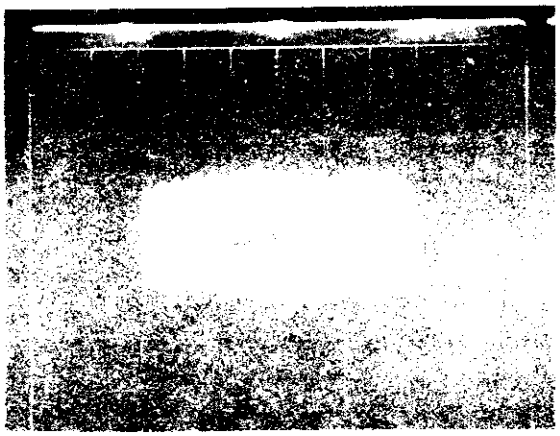

Step No.	Mode	Scope Range	Servo Loop	Test Point No.	Adj. Point	Adjustment and Check Details
12	PLAY =100 ↓ SET UP	10mV/div	TANG C/L TRKG C/L	TP-11 TP-1	VR1	**• FOCS LOOP OFFSET** Disconnect TP-8 and TP-1/6 from GND. Push PLAY key. While observing RF signal at TP-11, adjust VR1 to obtain maximum RF signal. Next, while observing FOCS error at TP-1, conform the center of the waveform to a horizontal center line on CRT. Push REJECT key, verify the offset voltage is 0 ± 0.1V. If not, adjust VR1 to satisfy the above.
13	PLAY =20,000		TANG O/L TRKG O/L			**• OPTICAL PATH CHECK** This step has to be performed when the slider is replaced or the problem seems to relate with the optical path. Connect TP-8 and TP-1/6 to GND. Push PLAY key and scan to middle of the disc. TRKG and TANG mirrors are classified into five ranks by their sensitivities as shown below and their ranks designated on the connector housing. Verify the mirror ranks. Connect each end of jig VR to +12V line and −12V line of VSOP, and also the center tap to TP-7 through the resistor corresponding to the mirror rank. Connect the scope to TP-5. Adjust the jig VR to obtain maximum TRKG error, and read the peak-to-peak amplitude: Eto. Rotate the jig VR so that maximum positive mirror bias is put to TRKG mirror, and read the peak to peak amplitude: Etp. Rotate the jig VR so that maximum negative mirror bias is put to, and read Etn. Make sure the followings Etp ≥ 0.65 × Eto, and Etn ≥ 0.65 × Eto Likewise, put mirror bias to TANG mirror at TP-12, and measure TRKG error peak-to-peak amplitudes Eto, Etp and Etn at TP-5. Then, make sure the above.

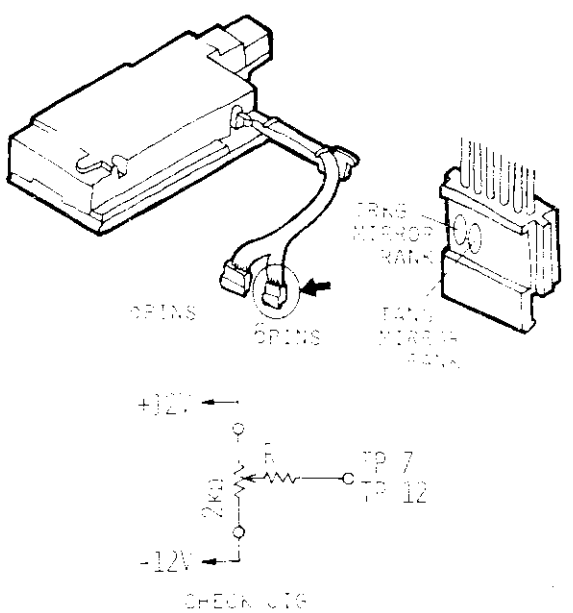

Mirror Rank			R(Ohm)
Code	Color	No	
C1	Black	1	316
C2	Red	2	300
C3	Yellow	3	273
D	Blue	4	240
E	Green	5	218

Step No.	Mode	Scope Range	Servo Loop	Test Point No.	Adj. Point	Adjustment and Check Details
14	SCAN FWD		TANG C/L TRKG C/L	TP-7	VR7	**• TRKG MIRROR STOPPER** Insert a low pass filter (47kΩ/0.01μF) between the probe and the scope input (CH-Y), set the oscilloscope into X-Y mode. Connect the probe to TP-7, and verify the ground level in CH-Y input. (CH-X isn't used.) While scanning to forward direction, adjust VR7 to obtain a positive voltage depending on the mirror rank. Mirror ranks and set point are shown below.
15	PLAY #1,000	5mV/div	TANG C/L TRKG C/L	TP-4/6	VR401	**• VCOM** Adjust VR401 to minimize the TANG error waveform in vertical blanking interval of the video signal at TP-4/6.

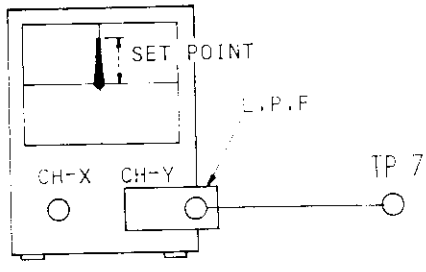

Mirror Rank			Set point (V)
Code	Color	No	
C1	Black	1	0.50 ± 0.05
C2	Red	2	0.55 ± 0.05
C3	Yellow	3	0.60 ± 0.05
D	Blue	4	0.70 ± 0.10
E	Green	5	0.90 ± 0.10

Step No.	Mode	Scope Range	Servo Loop	Test Point No.	Adj. Point	Adjustment and Check Details
16	PLAY #1,000	10mV/div	TANG C/L TRKG C/L ↓ TANG O/L	TP-12	VR405 VR404	**• TANG MIRROR STOPPER** Insert a low pass filter (47kΩ/0.01μF) between the probe and the scope input. Connect the probe to TP-12. Rotate VR405 fully CW direction, adjust VR404 to obtain the set point X. (shown below) Rotate VR405 slowly to CCW direction and adjust to the set point Y at TP-12. Connect TP-1/6 to GND, readjust VR404.
17	STILL #100~ #1,000	20mV/div	TANG C/L TRKG C/L	VIDEO OUT	VR201	**• VIDEO OUTPUT LEVEL** Player in STILL mode in "Composite test" signal reproducing. With Video Output terminated into 75Ω, verify the video level is 1 ± 0.1V from sync tip to white peak. If not, adjust VR201 to satisfy the above.

Mirror Rank			Set point	
Code	Color	No	X(V)	Y(V)
C1	Black	1	-0.55	-0.40
C2	Red	2	-0.60	-0.45
C3	Yellow	3	-0.65	-0.50
D	Blue	4	-0.70	-0.55
E	Green	5	-0.80	-0.65

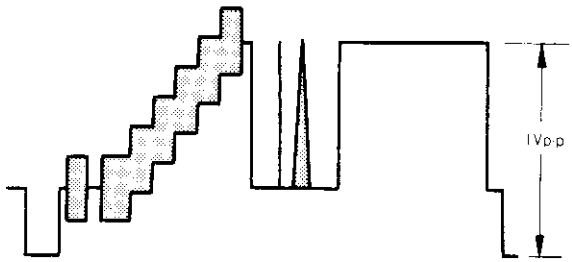

Step No.	Mode	Scope Range	Servo Loop	Test Point No.	Adj. Point	Adjustment and Check Details
18	STILL #100~ #1,000	20mV/div	TANG C/L TRKG C/L	Z201 pin-16 pin-18	VR202	• 1H DELAYED VIDEO LEVEL Verify the video level at pin-16 of Z201 is equal to the level at pin-18. If not, adjust VR202 to satisfy the above.
19	SET UP	0.2V/div	TANG C/L TRKG C/L	TP-11 Z201 pin-14	VR204	• DOS TIMING Input a signal of 5.5MHz (200mVp-p) to TP-11. Rotate VR204 fully CW, then back to CCW until the voltage at pin-14 of Z201 turns H to L.
20	PLAY #20,000		TANG C/L TRKG C/L	N9-7 Z201 pin-6	VR203	• V SYNC TRAILING EDGE TIMING Play in the vicinity of #20,000. Verify that V SYNC trailing edge is aligned with the position between the 1st and 2nd equalizing pulses in COMP SYNC (pin-6 of Z201) after that trailing edge. If not, adjust VR203 to satisfy the above.

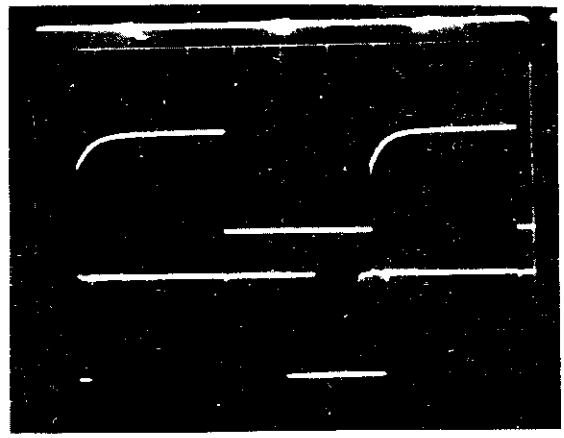

Step No.	Mode	Scope Range	Servo Loop	Test Point No.	Adj. Point	Adjustment and Check Details
21	PLAY #20,000	0.2V/div	TANG O/L TRKG C/L	TP-3/6 TP-2/6	VR406	**• SPDL LOOP OFFSET** Connect TP-1/6 to GND and play in the vicinity of #20,000. Adjust VR406 to align the center of the leading edge of PB H (TP-2/6) including jitter with the leading edge of REF H (TP-3/6). After 20 to 30 seconds, verify that the phase difference between PB H and REF H is less than ±2 sec. If it is greater, adjust VR406 again. Disconnect TP-1/6 from GND and make sure that there is no red streak or other color distortion in the TV monitor.

9-2. CONT ADJUSTMENT

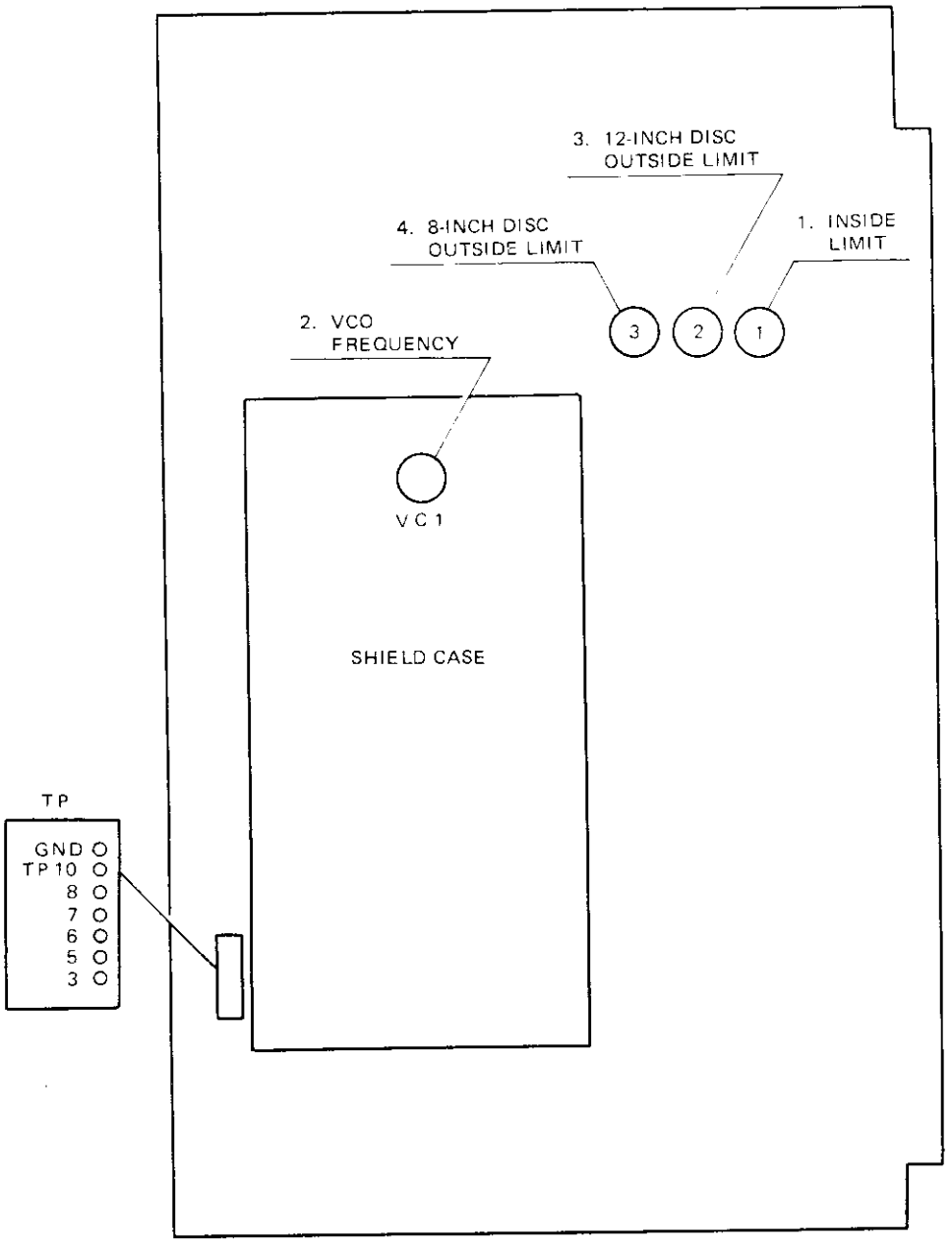

NOTE: Use B1 TEST DISC in adjustments.

Step No.	Mode Fr. No.	Servo Loop	Test Point	Adj. Point	Details
1.	Inner most track	TRKG O/L	TV monitor	VR1	• **INSIDE LIMIT ADJUSTMENT** Following PLAY mode, proceed with SCAN FWD and REV modes, and adjust VR1 so that STILL mode is obtained between LEAD-IN No. 8 and 10 on the TV monitor. (No. 9 should be seen.)
2.	PLAY	C/L	TP7	VC1	• **VCO ADJUSTMENT** Turn VC1 inside of the shield case to obtain a voltage at TP7 of approx. 4V so that the FRAME No. display is steady on the monitor.
3.	Outer most track		TP5 TP6 TP3 TP10	VR2	• **12-INCH DISC OUTSIDE LIMIT ADJUSTMENT** Clip TP5 and TP6 together with shorting clips, SEARCH for FRAME No. 50,400 or over, and make sure that the mode is changed to STILL in FRAME No. 50,400. STEP FWD to obtain LEAD-OUT Nos. on the monitor. Adjust VR2 so that a voltage at TP3 switches from L to H in LEAD-OUT No. 10 near by. Connect TP10 to the ground and make sure that the FOCS motor is pull down between LEAD-OUT No. 19 and the outer end of the disc.
4.	PLAY #23,500		TP5 TP6 TP8 TP3	VR3	• **8-INCH DISC OUTSIDE LIMIT ADJUSTMENT** Clip TP5 and TP6 together with a shorting clips, and connect a 10kΩ resistor between TP5 and TP8 (thereby turning Q3 on). SEARCH for FRAME No. 23,500, and set VR3 to the very limit where a voltage at TP3 doesn't switch from H to L. Switch to PLAY mode and make sure that a voltage at TP3 switches from H to L between FRAME No. 23,900 and 24,000.

9-3. AUDX ADJUSTMENT

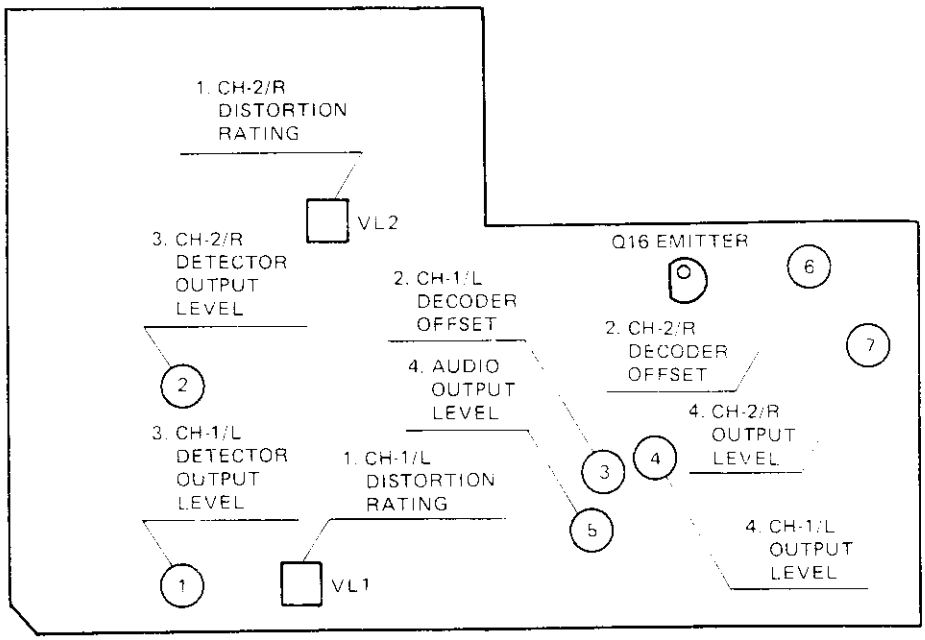

Step No.	Mode	Equipment	Adjustment Point	Details
1				**• AUDIO OUTPUT CHECK**
	PLAY #3,601~ #4,500	Level meter Distortion meter	VR5 VR1 VR4 VR2 VR7 VL1 VL2	Connect a level meter to Audio Output terminated into 51kΩ. Switch CX off, and turn VR5 to the mechanical center. Set the player to PLAY mode in #3,601. (1kHz, 75%mod.) Make sure that the audio output is 490 ± 100mV-rms for both channels; 1/L and 2/R. If not, adjust VR to satisfy the above. 1/L: Set VR1 to the mechanical center, and make rough adjustment with VR4. 2/R: Set VR2 to the mechanical center, and make rough adjustment with VR7. Switch only 1/L channel on, and adjust VL1 to minimize distortion in 1/L channel. Switch only 2/R channel on, and adjust VL2. The distortion rating for both channels should be less than 0.3%.

Step No.	Mode	Equipment	Adjustment Point	Details
2				**• DECODER OFFSET**
	STILL	Milivolt-meter	VR3 VR6	Connect a milivolt-meter to Audio Output terminated into 51kΩ. While pressing CX key on and off repeatedly as fast as possible, adjust VR3 so that the deflection of the pointer is less than 1.5mV in 1/L channel. Similarly, adjust VR6 in 2/R channel.
3				**• DETECTOR OUTPUT LEVEL**
	PLAY #6,301~ #7,200 • #3,601~ #4,500	Volt-meter	VR1 VR2	In CX on mode, set to PLAY mode in #6,301. (nonmodulation) Measure a voltage at Q16 emitter; Ecn. Switch only 1/L channel on, and set to PLAY mode in #3,601. (1kHz, 75%mod.) Adjust VR1 so that the voltage at Q16 emitter comes 9.375 × Ecn. Similarly, adjust VR2 in 2/R channel.
4				**• AUDIO OUTPUT LEVEL**
	PLAY #3,601~ #4,500	Level meter	VR4 VR7 VR5	In CX on mode, set to PLAY mode in #3,601. (1kHz, 75%mod.) Adjust VR4 so that 1/L channel output level comes 914mVrms, and adjust VR7 in 2/R channel. Switch CX off, and adjust VR5 to obtain the audio output level in both channels of 488 ± 20mVrms.

10. TROUBLE SHOOTING

Problem	Cause	Check Point
Lid fails to open when REJECT/OPEN button is pressed.	Slider is not in PARK position, and cannot be activated.	
	Defective slider driver gear.	If the slider motor is turning, replace the slider drive gear section.
	Defective slider motor.	If drive voltage is applied to the slider motor, replace the slider motor.
	Defective slider servo circuit.	If no drive voltage is applied to the slider motor, check UN4004 (12) in the VSOP. If a negative voltage (−6V) is detected when the REJECT button is pressed, check the subsequent drive circuit. VSOP N7-3 (SCANA) - L N7-1 (SCANC) - L is normal
	Plunger fails to move Defective plunger.	If a −20V voltage is generated at SYPS (13) when the REJECT button is pressed, the plunger is defective.
	Defective plunger drive circuit.	An output voltage of −20V will not appear at SYPS (13) if LIDOPN +2V (min.) from CONT is applied to SYPS (14) when the REJECT button is pressed.

Problem	Cause	Check Point
Disc fails to rotate when PLAY button is pressed.	Laser beam not on.	Check whether inter-lock switch or lid switch has depressed when the lid is closed. Check inter-lock switch and lid switch for conductivity. Check whether $\overline{\text{LASER ON}}$ switch is applied to LSPS (12) from CONT. Check relevant LSPS points, especially if the +12V line tends to be low.
	No lens up operation Defective focus motor	Measure DC resistance in focus motor. Normal value is about 10Ω. Check that there is no obstructuion to focus motor movement.
	Defective bridge balance adjustment	VSOP adjustment, step 3.
	No $\overline{\text{FOCS ON}}$ signal	Check presence of $\overline{\text{FOCS ON}}$ signal at VSOP (N7-5) when PLAY button is pressed.
	Defective drive circuit	Check for generation of drive voltage at VSOP (N5-5).
	Proper focus cannot be attained Lens needs cleaning.	Clean lens.
	Defective RFAM	Check that the focus error voltage describes an S-shape curve at VSOP TP-1 when lens is moved up. Normal level: ±2Vp-p min.
	Slider beam axis out of alignment Excessive TANG or TRKG bias	Place a piece of paper over the lens, and move the lens up. If a "bight" is taken out of the beam spot, the problem is due either to misalignment of the slider beam axis, or excessive bias. TANG bias at TP-12: 0 ±20mV TRKG bias at TP-7: 0 ±20mV.
	Defective FOCS gain adjustment	VSOP adjustment, step 11.
	Defective FOCS servo circuit	Check Z1, Z3, Q1 and other elements.

Problem	Cause	Check Point
Disc fails to rotate when PLAY button is pressed.	Defective SPDL motor.	Check for generation of motor drive voltage (about +20V) at VSOP (N8-6) after focussing. Failure to rotate when this voltage is applied to the SPDL motor indicates a defective SPDL motor.
	No $\overline{\text{SPDL RUN}}$ signal FOCS LOCK signal not applied to CONT after focussing.	Does $\overline{\text{FOCS LOCK}}$ signal appear at VSOP (N7-6)? Is $\overline{\text{FOCS LOCK}}$ signal applied to CONT (N13-1)?
	Defective CONT	Is $\overline{\text{SPDL RUN}}$ signal applied to VSOP (N9-2)? Does SPDL RUN signal appear at CONT (N14-8)?
	Defective SPDL servo circuit	Failure to generate the drive voltage at VSOP (N8-6) when the $\overline{\text{SPDL RUN}}$ signal is applied to UM3002 (24) indicates a defective SPDL servo circuit.
Disc stops after rotating for only a few seconds.	Defective SPDL motor.	
	Defective FG adjustment	VSOP adjustment, step 6.
SPDL servo lock failure	Defective FG adjustment	VSOP adjustment, step 6.
	Defective RFAM or VDEM	Check presence of RF SENS signal at UM3002(26).
		Check presence of $\overline{\text{COMP SYNC}}$ signal at UM5003 (13).
	Defective UM5003	REF H (15.734kHz) should appear at TP3.
		Check that PB H is generated at TP2.
	Defective UM3001	Check for appearance of the PFC output at UM3001 (10) (oscilloscope V rate).
	Defective SPDL offset adjustment	VSOP adjustment, step 21.

Problem	Cause	Check Point
TRKG servo not applied	Defective TRKG mirror	Check voltage at TP-7 (TRKG return)
	Defective disc sensor circuit	Normally TP8 +1.5V min.
	Grating adjustment out of alignment	A TRKG error of 2.5Vp-p min. will normally be obtained at TP-5 when TP-8 is connected to ground.
	TRKG balance or TRKG gain adjustment out of alignment	VSOP adjustment, step 8~10.
SPDL lock activated, but no picture	Defective UA5001	Check for presence of video signal at UA5001 (1).
	Defective CONT	Check release of VIDEO SQ after SPDL lock. UA5001(2) normally at H level.
No color	Defective TANG mirror	Turn VR404 (TANG bias) around and check for voltage changes at TP-12 (TANG return).
	Defective TANG mirror drive circuit	Ditto
	Defective UM5003	Video signal should appear at UM5003(2).
		Sampling pulse should be generated at UM5003(27). 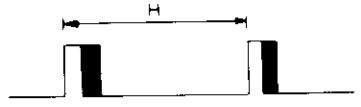
		The following waveform should appear at UM5003 (3).
		TANG error should appear at TP4.

Problem	Cause	Check Point
	Defective TANG loop control circuit	Check Z408 (1/2), Q435 and Q416.
Color drop-outs	SPDL offset adjustment output	VSOP adjustment, step 21.
	Defective SYNC gate	When UM5003(12) is normal 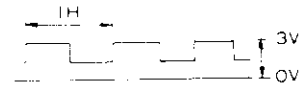
Trick play such as still playback not possible.	Microcomputer fails to read data	Check for data output at UA5002(3). (N14-3)
Still playback not possible.	JUMP TRIG not applied.	Does JUMP TRIG signal appear at VSOP (N7-4)? Does JUMP TRIG signal appear at CONT (N13-8)?
	No jump pulse output	Check for generation of jump pulse at UM4004(1).
Chapter (frame) number search not possible	VDEM VR203 adjustment out of alignment	VSOP adjustment, step 20.
	Unstable VSYNC (vertical movement)	Check VDEM VR203 and surrounding time constant circuits.
Unsteady display (of frame number etc).	Defective CONT VC1 adjustment (lateral movement)	CONT adjustment, step 2.
	Level of video input applied to RFMD is too high	VSOP adjustment, step 17.
Scanning not possible	Defective CONT	Check for presence of SCANA at VSOP N7(3). (L level)
	Defective UM4004	Does ±3.3V appear at UM4004(12)?
Color drop-out during scanning	TRKG mirror stopper adjustment out of alignment	VSOP adjustment, step 16.
	Slider beam axis out of alignment	VSOP adjustment, step 13.

11. SCHEMATIC DIAGRAMS, PCB PATTERNS AND PARTS LISTS

11-1 OVERALL

- *The ⚠ mark found on some component parts indicates the importance of the safety factor of the part. Therefore, when replacing, be sure to use parts of identical designation.*

CIRCUIT BOARDS

Mark	Part No.	Symbol & Description
	VWR-019	SYPS
	VWR-011	LSPS
	VWM-001	MCNB
	VWV-010	RFAM
	VWS-022	VSOP
	VWV-023	CPCB
	VWG-043	PSCB
	VWV-044	AUDX
	VWG-102	CONT
	VWG-044	GATB
	VWG-101	IOIB
	VWG-045	IRAB
	VWW-046	KEYC

OTHERS

Mark	Part No.	Symbol & Description
⚠	VTT-016	Power transformer
	VXM-017	Spindle motor
	VXM-008	Slider motor
	(VXM-010)	
	VXP-005	Plunger
	VGX-023	Slider assembly
⚠	VSA-006	SW1 Power switch
	VSF-006	SW2 Interlock switch
	VSF-007	SW3 Lid switch
	SM1A-02	D1
	RD1/4PM271J	R1
	VCS-005	Potentiometer
⚠	VCG-011	C1
	VCG-005	C2-C5
	CKDYF333Z50	C6
⚠	VDG-016	Power cord
	VDA-013	H.V. cord assembly

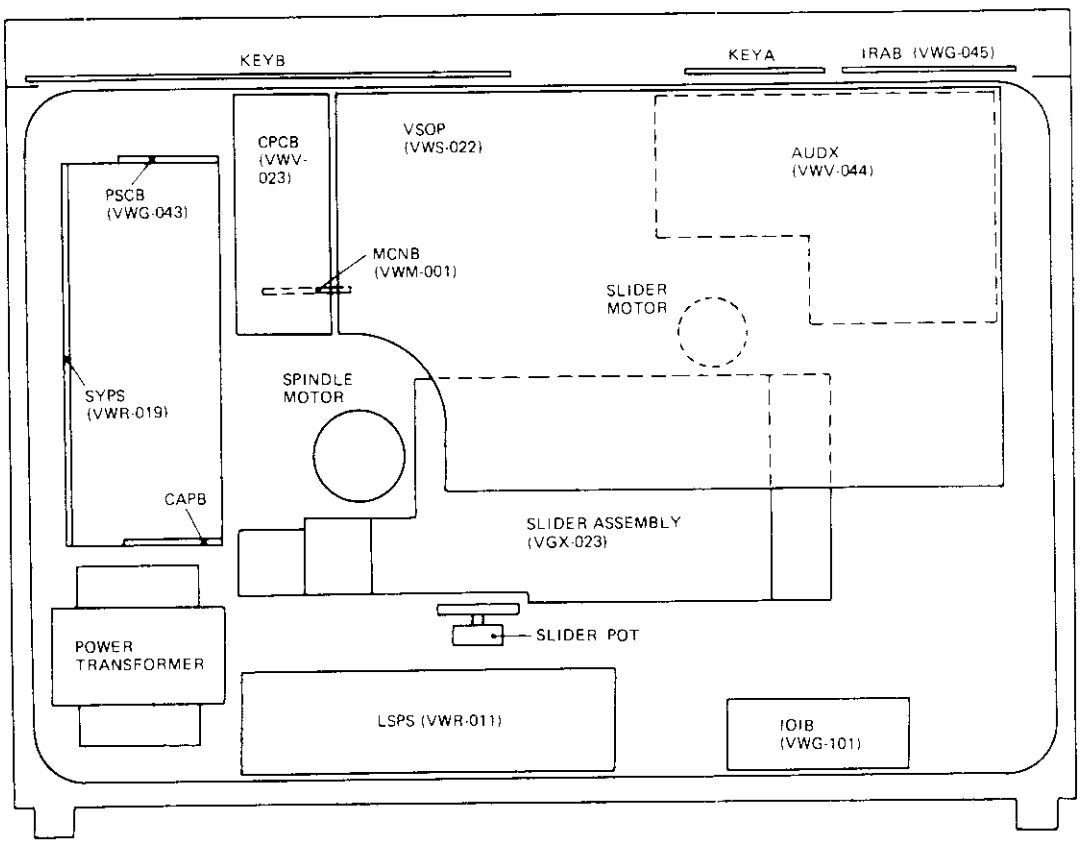

OVERALL CONNECTIONS

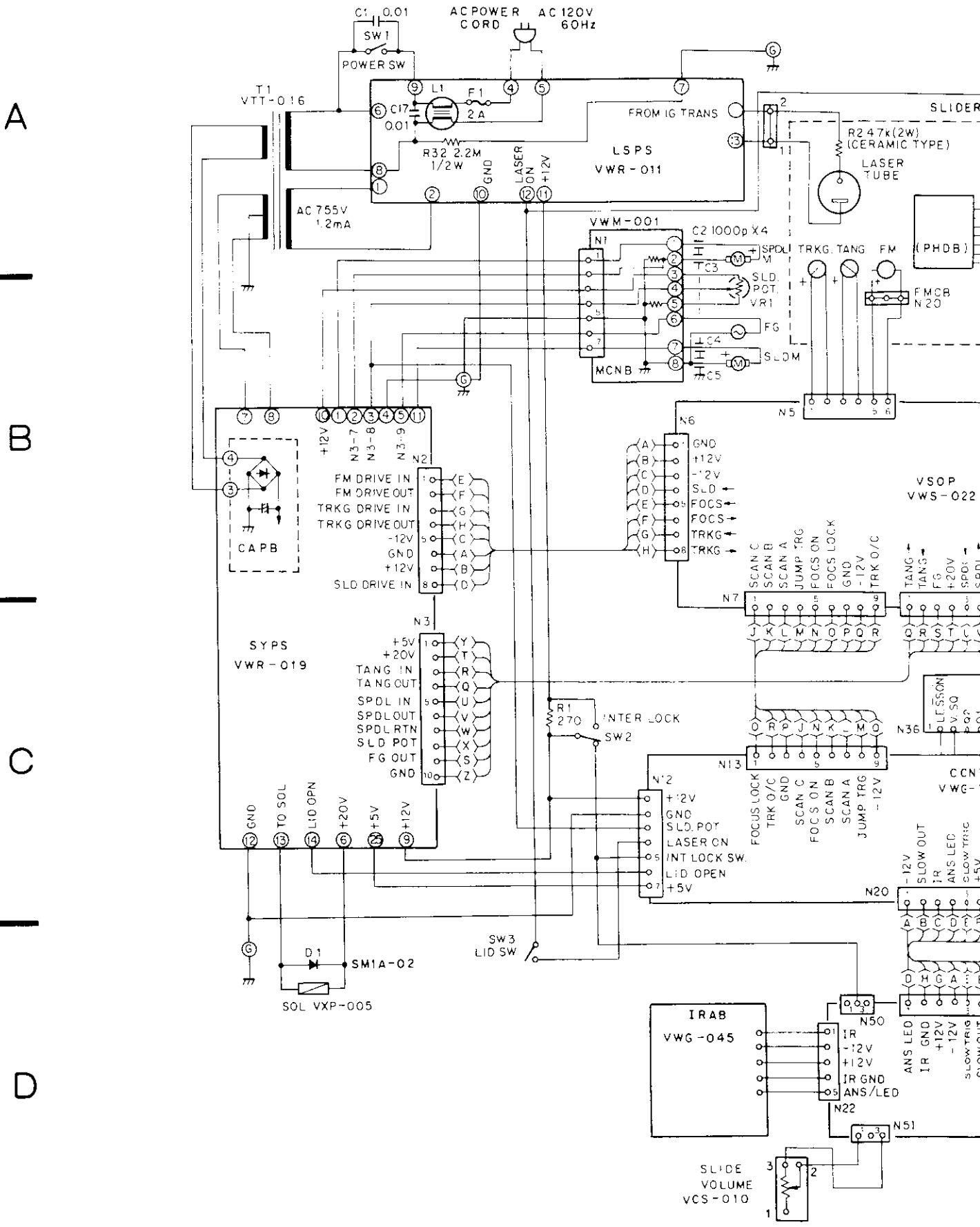

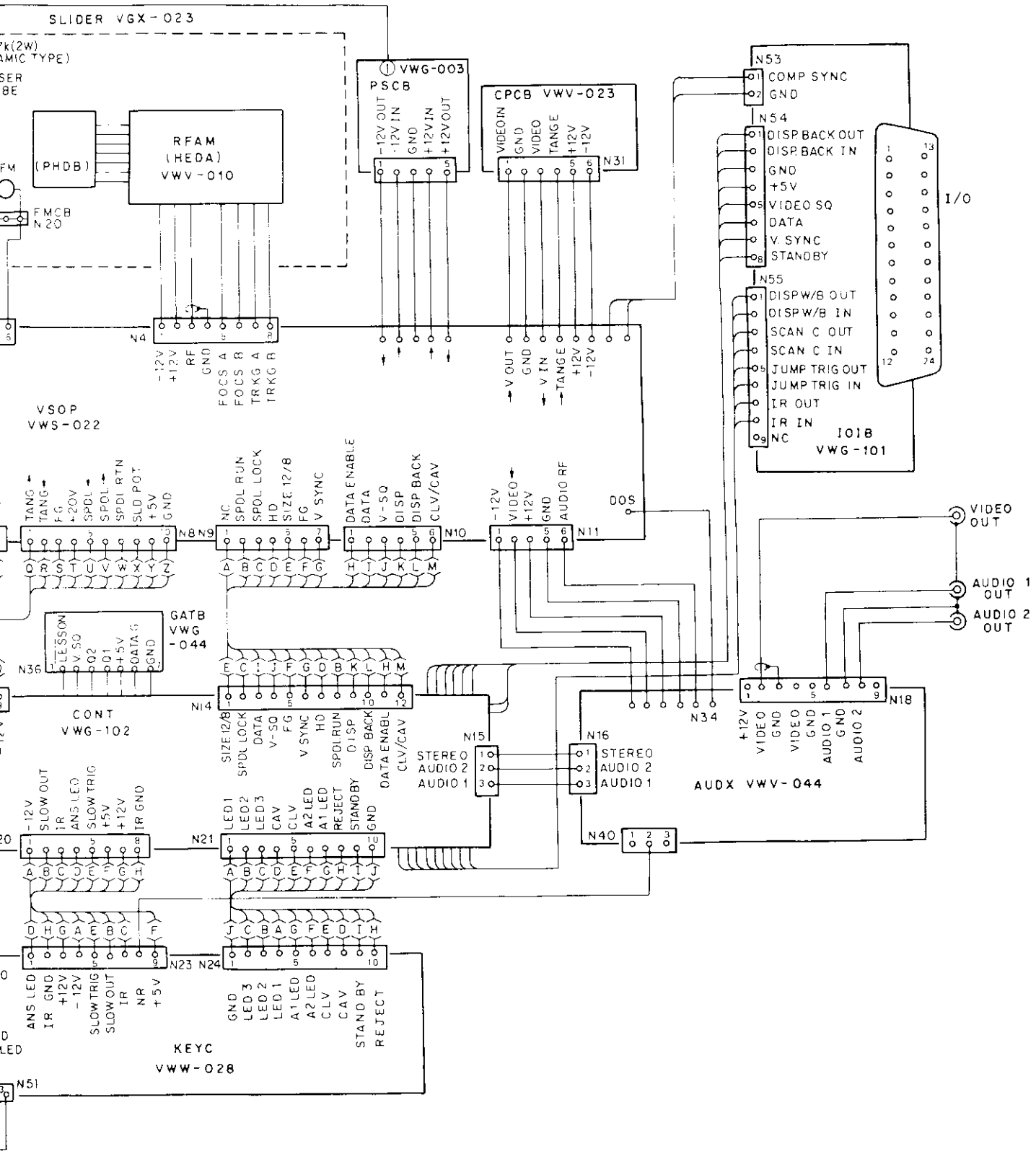
SLIDER VGX-023
RFAM
(HEDA)
VWV-010
(PHDB)
FMCB
N20
VWG-003
PSCB
CPCB VWV-023
N31
N4
VSOP
VWS-022
N53
COMP SYNC
GND
N54
DISP BACK OUT
DISP BACK IN
GND
+5V
VIDEO SQ
DATA
V. SYNC
STANDBY
N55
DISP W/B OUT
DISP W/B IN
SCAN C OUT
SCAN C IN
JUMP TRIG OUT
JUMP TRIG IN
IR OUT
IR IN
NC
I/O
IOIB
VWG-101
N8 N9
N10
N11
DOS
VIDEO OUT
AUDIO 1 OUT
AUDIO 2 OUT
GATB
VWG-044
N36
CONT
VWG-102
N14
N15
N16
STEREO
AUDIO 2
AUDIO 1
N34
N18
AUDX VWV-044
N40
N21
N23 N24
KEYC
VWW-028
N51

11-2 SYPS, LSPS AND MCNB

SYPS (VWR-019)

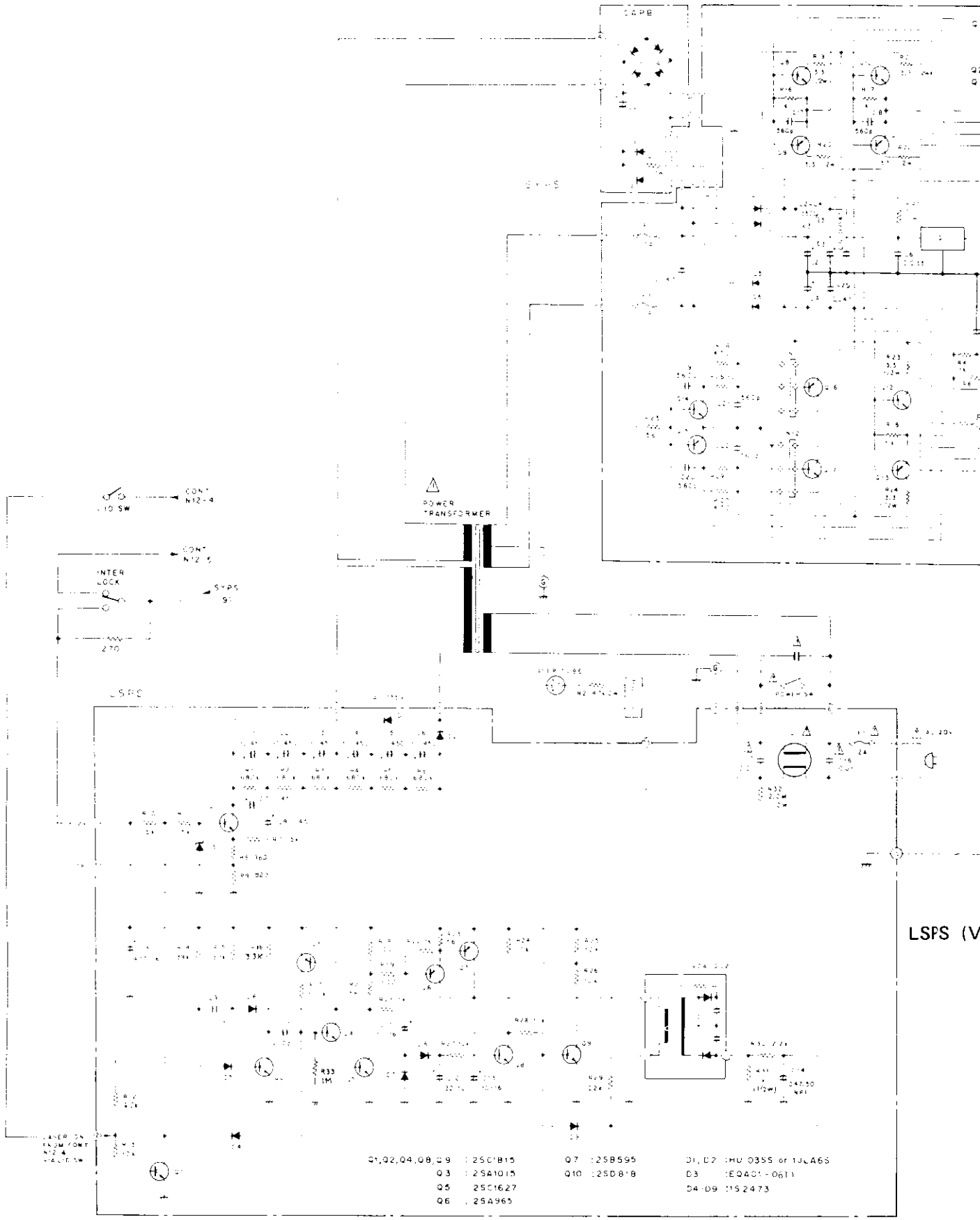

LSPS (V

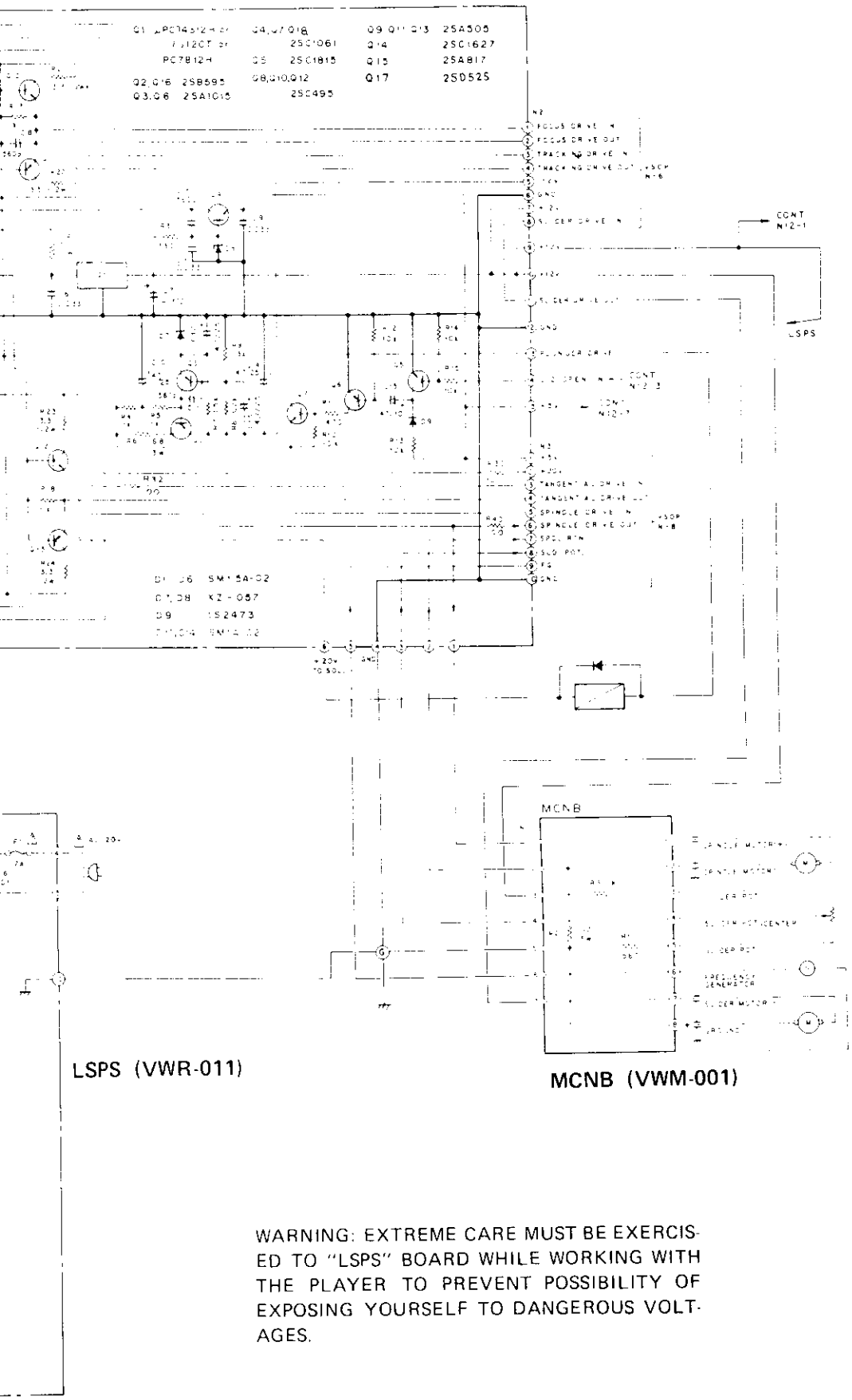

WARNING: EXTREME CARE MUST BE EXERCISED TO "LSPS" BOARD WHILE WORKING WITH THE PLAYER TO PREVENT POSSIBILITY OF EXPOSING YOURSELF TO DANGEROUS VOLTAGES.

μPC14312H
μPC7812H

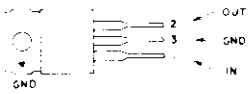

A

2SA965

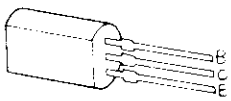

2SD818

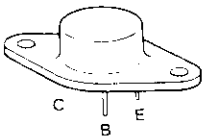

B

2SB595
2SC1061

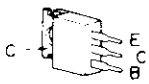

C

2SC1627
2SA817
2SC2320

2SA505
2SC495

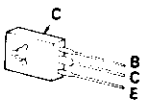

D

2SA1015
2SC1815

SYPS(VWR-019) Parts list 1

(MK)(Part No.)	(IT)	(REF Nos. & DESCRIPTIONS)
UPC7812H	Z	1
2SB595-O/Y	Q	2, 16
2SA1015-O/Y/GR	Q	3, 6
2SC1061-B/C	Q	4, 7
2SC1815-O/Y/GR	Q	5
2SC495-O/Y	Q	8, 10, 12
2SA505-O/Y	Q	9, 11, 13
2SC1627-O/Y	Q	14
2SA817-O/Y	Q	15
2SD525-O/Y/GR	Q	17
SM1.5A-02	D	1- 6
XZ-057	D	7, 8
(RD5.6EB2)		
1S2473	D	9
SM1A-02	D	11- 14
RD1/4PM000J	R	3- 5, 7- 18, 25- 29, 32, 40
VCN-016	R	6 6.8/3W
RD1/2VS3R3J	R	19- 24
VCN-004	R	30 10/3W
VCN-009	R	41,101 1.2/3W
CKDYF473Z50	C	1, 5, 25
VCH-009	C	2- 4 3300/25
CKDYF333Z50	C	6, 8, 9
CEA4R7M25	C	7, 12- 14
CEA470M25	C	10
CKDYB561K50	C	11, 16- 22
CEA470M10	C	15
CEA222M10	C	101
VEK-006	FU	2, 3 Fuse 3A
VKR-001		Fuse holder
VKP-060		Conn.cords Q16
VKP-061		Conn.cords Q17
VEC-028		Spacer
VEC-002		Insulator/round
VEC-072		Insulator/square
VBA-003		Screw

LSPS(VWR-011) Parts list 1

(MK)(Part No.)	(IT)	(REF Nos. & DESCRIPTIONS)
2SC1815-O/Y/GR	Q	1, 2, 8, 9
(2SC2320-E/F)		
(2SC2603-E/F)		
2SA1015-O/Y/GR	Q	3
2SC1815-O/Y	Q	4
2SC1627-O/Y	Q	5
2SA965-O/Y	Q	6
2SB595-O/Y	Q	7
2SD818	Q	10
1JLA6S	D	1, 2
(GHV-03SSN)		
EQA01-06TI	D	3
1S2473	D	4- 9
RD1/4PM000J	R	1- 8, 10- 30
RN1/4PR8200F	R	9
RD1/2VS000J	R	31, 32
VCH-003	C	1- 6
VCH-010	C	7, 8
CKDYB102K50	C	9
CCDSL221J50	C	10
CEA100M16	C	11, 13
CEA220M10	C	12
CEAR47M50NP	C	14
CEA471M16	C	15
VCG-018	C	17
VTL-004	L	1 Line filter
(VTL-003)		
VEK-004	FU	1 Fuse 2A
VKR-001		Fuse holder
VDA-005		H.V. cord
VKN-049		H.V. cap
VCA-004		I.G. block
(VCA-002)		

MCNB(VWM-001) Parts list 1

(MK)(Part No.)	(IT)	(REF Nos. & DESCRIPTIONS)
RD1/4PM000J	R	1, 3
VCN-018	R	2 1.2/5W

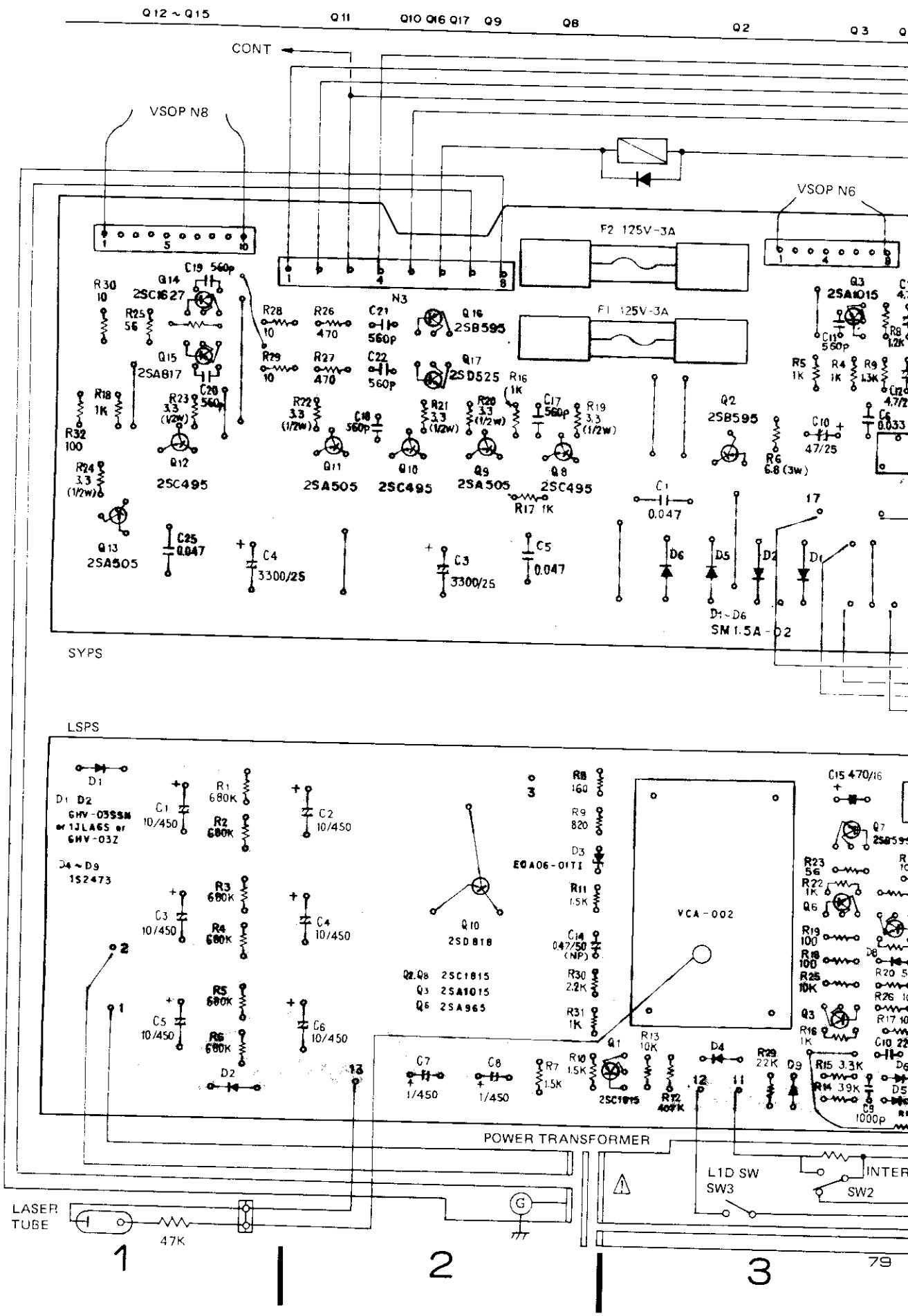
Q12 ~ Q15
Q11
Q10 Q16 Q17 Q9
Q8
Q2
Q3
CONT
VSOP N8
VSOP N6
F2 125V-3A
F1 125V-3A
N3
SYPS
LSPS
D1~D6
SM 1.5A-02
VCA-002
POWER TRANSFORMER
LASER TUBE
47K
L1D SW
SW3
SW2
INTER

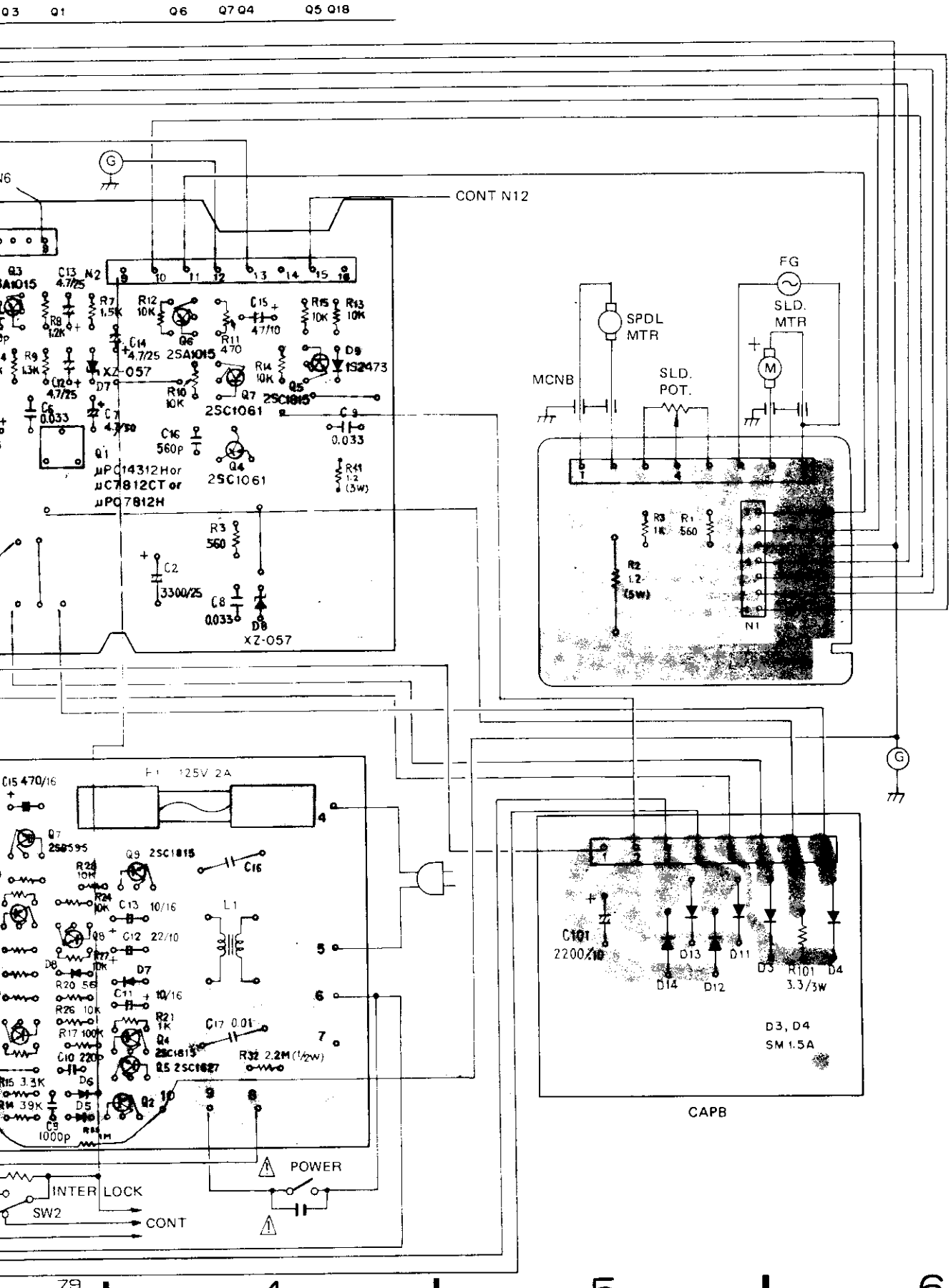
CONT N12
FG
SLD. MTR
SPDL MTR
MCNB
SLD. POT.
N1
CAPB
D3, D4
SM 1.5A
POWER
INTER LOCK
SW2
CONT
XZ-057
2SC1061
2SA1015
2SC1815
μPC14312H or
μC7812CT or
μPC7812H

11-3 RFAM

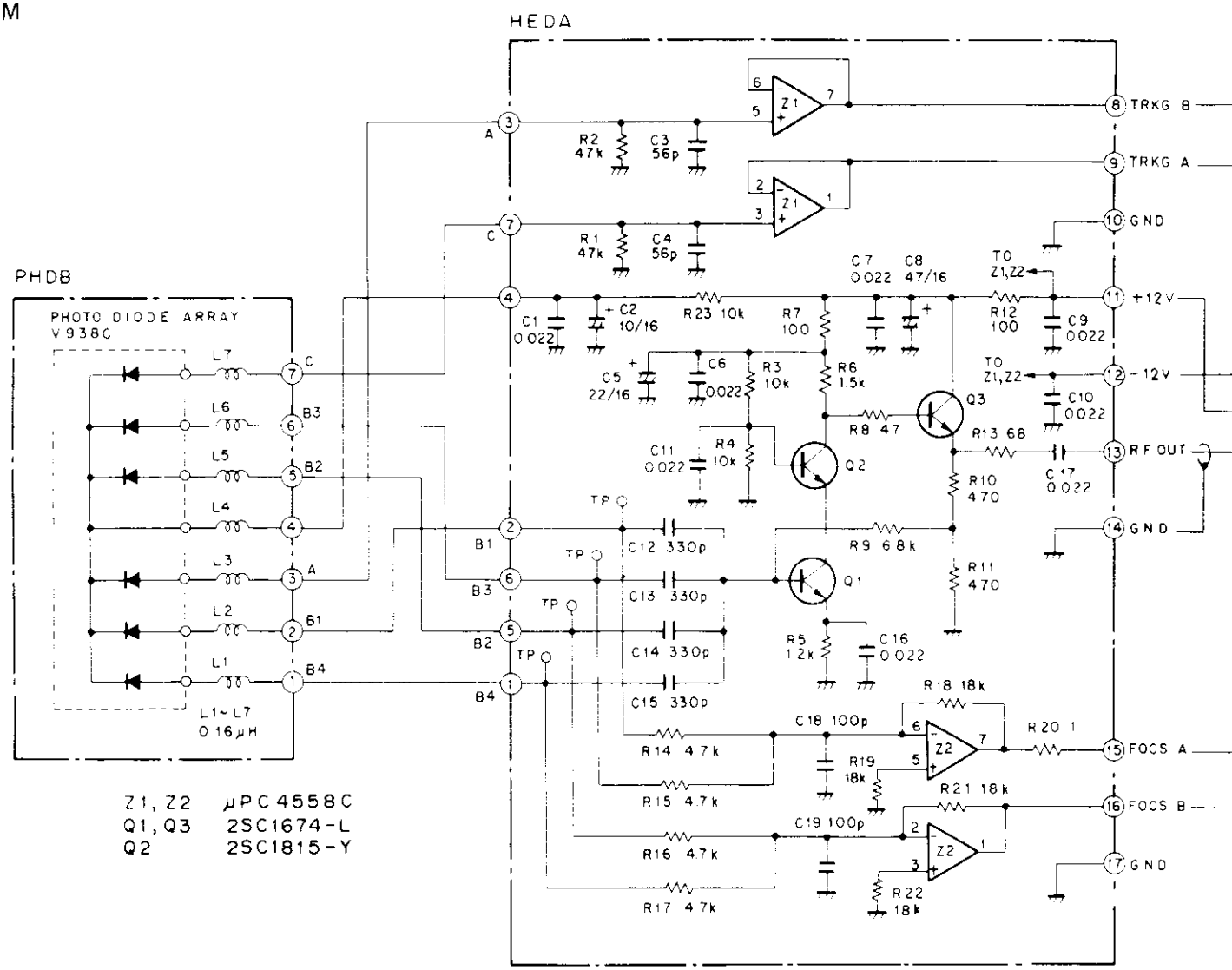

RFAM(VWV-010) Parts list 1

(MK)(Part No.)	(IT)	(REF Nos. & DESCRIPTIONS)
UPC4558C	Z	1, 2
2SC1674-L/K (2SC2786-L/K)	Q	1, 3
2SC1815-Y	Q	2
RD1/4PM000J	R	1- 17, 19, 20, 22, 23
RN1/4PR1802F	R	18, 21
CKDYF223Z50	C	1, 6, 7, 9- 11, 16, 17
CEA100M16	C	2
CCDSL560J50	C	3, 4
CEA220M16	C	5
CEA470M16	C	8
CCDSL331K50	C	12- 15
CCDSL101J50	C	18, 19
VTF-011	L	1- 7
VKP-072		Conn.cords

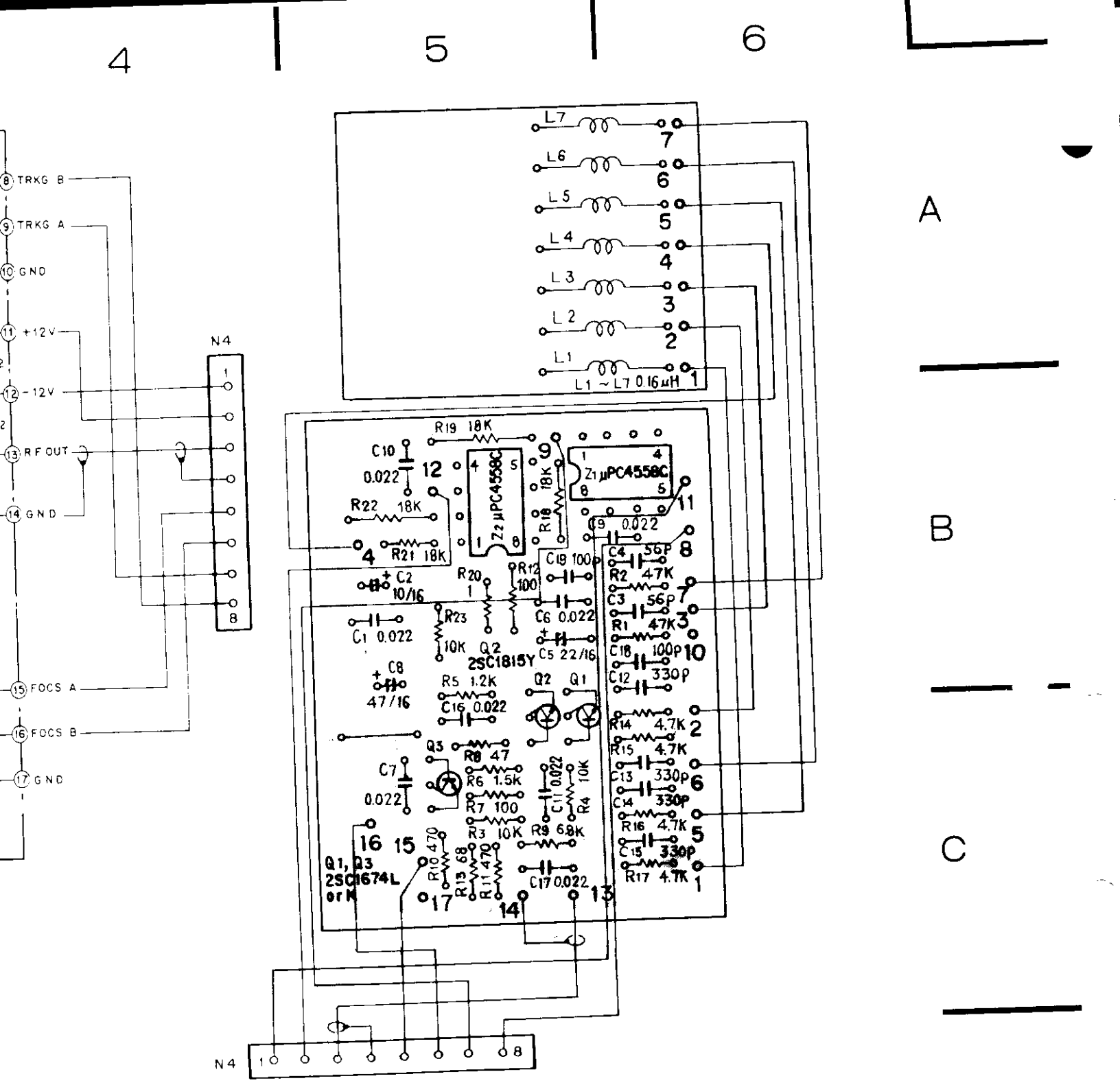
TRKG B
TRKG A
GND
+12V
-12V
RF OUT
GND
FOCS A
FOCS B
GND
N4
L7
L6
L5
L4
L3
L2
L1
L1 ~ L7 0.16μH
R19 18K
C10 0.022
R22 18K
R21 18K
Z2 μPC4558C
Z1 μPC4558C
R18 18K
C9 0.022
C18 100p
C4 56p
R2 47K
C3 56p
R1 47K
C18 100p
C12 330p
C2 10/16
R20 1
R12 100
C6 0.022
C5 22/16
C1 0.022
R23 10K
Q2 2SC1815Y
C8 47/16
R5 1.2K
C16 0.022
Q2
Q1
R14 4.7K
R15 4.7K
C13 330p
C14 330p
R16 4.7K
C15 330p
R17 4.7K
Q3
R8 47
C7 0.022
R6 1.5K
R7 100
C11 0.022
R4 10K
R3 10K
R9 6.8K
R10 470
R13 68
R11 470
C17 0.022
Q1, Q3 2SC1674L or K
N4
μPC4558C
OUT 1
IN − 1
IN + 1
V −
V +
OUT 2
IN − 2
IN + 2
2SC1815
B C E
2SC1674
B C E
2SC2786
B C E

VSOP (VWS-022) FTS SECTION

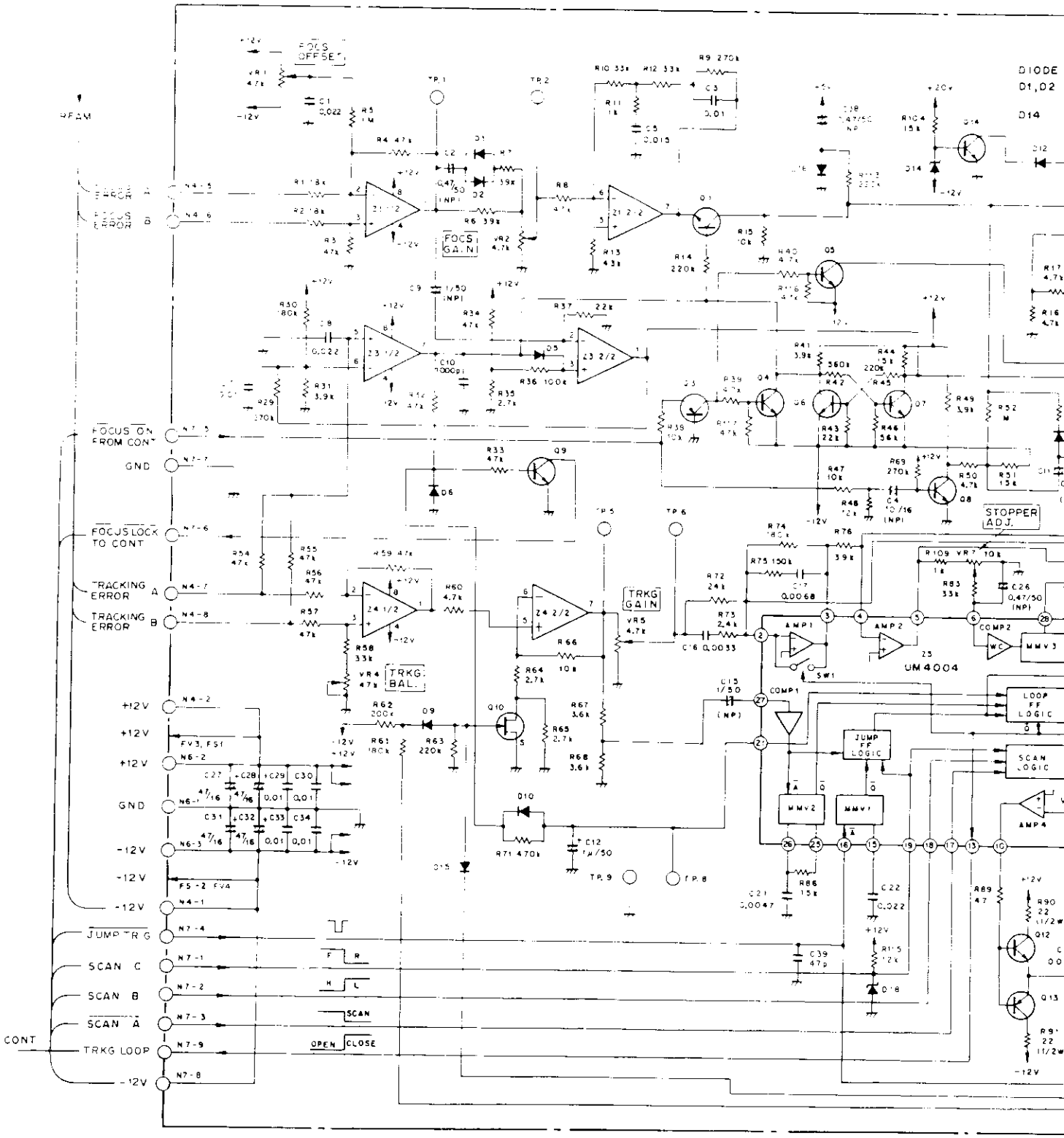

4 5

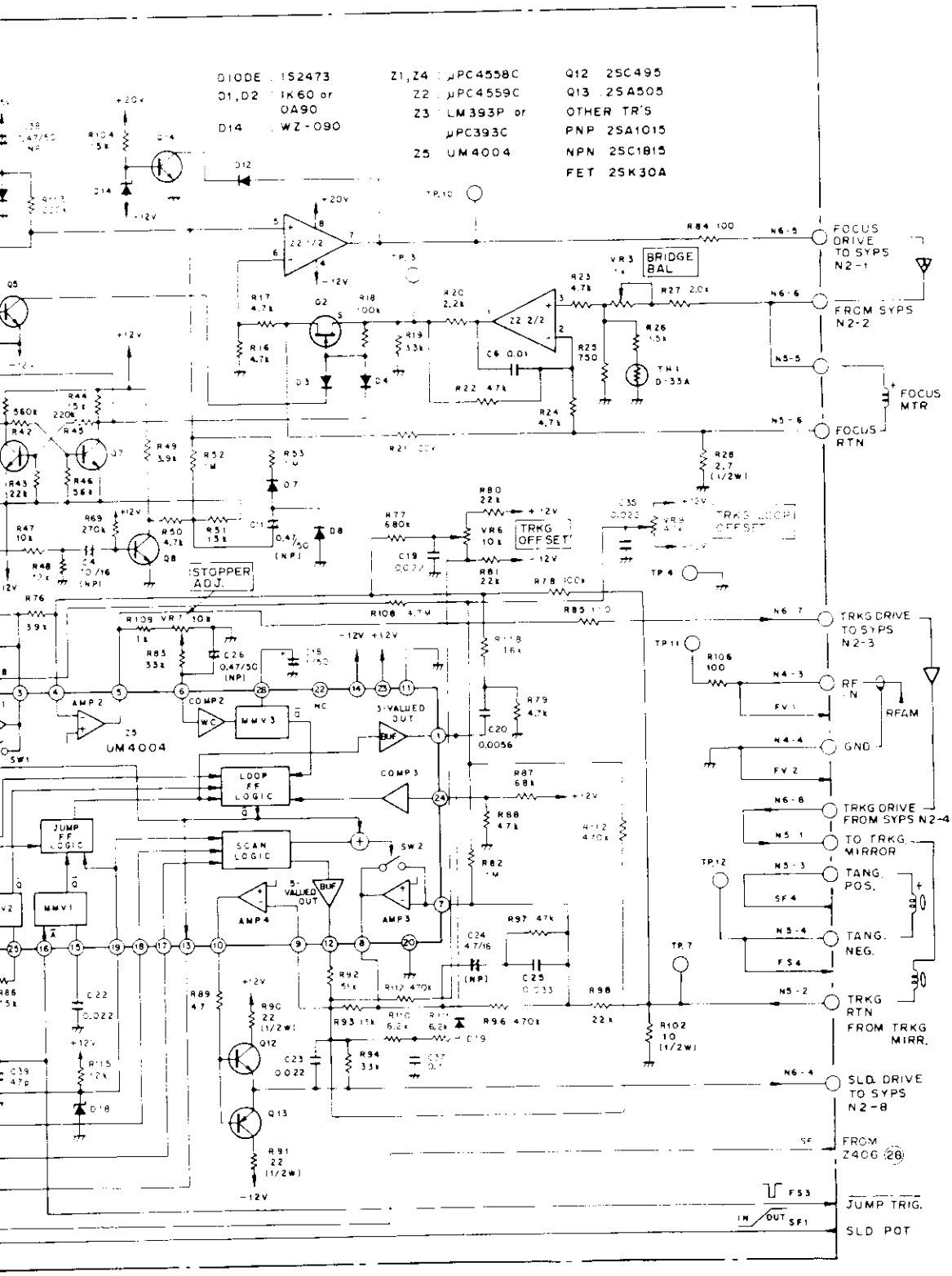

μPC4558C
NJM4558D

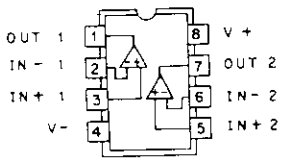

μPC393C
LM393P

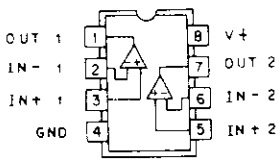

UM4004

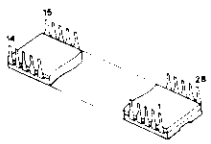

2SA505
2SC495

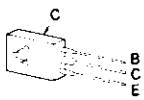

2SA1015
2SC1815

2SK30A

VSOP (VWS-022) SPDL, TANG SECTION

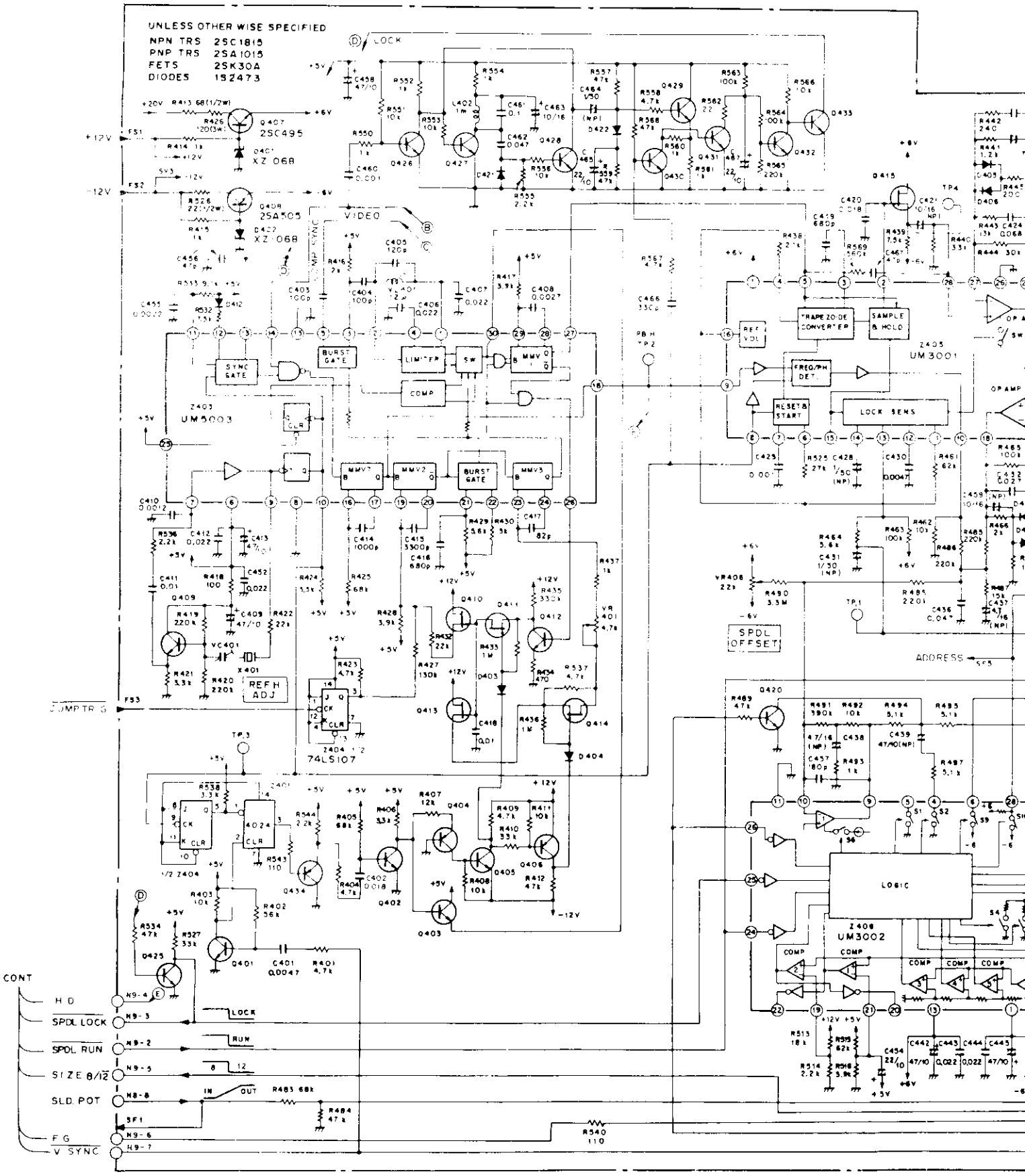

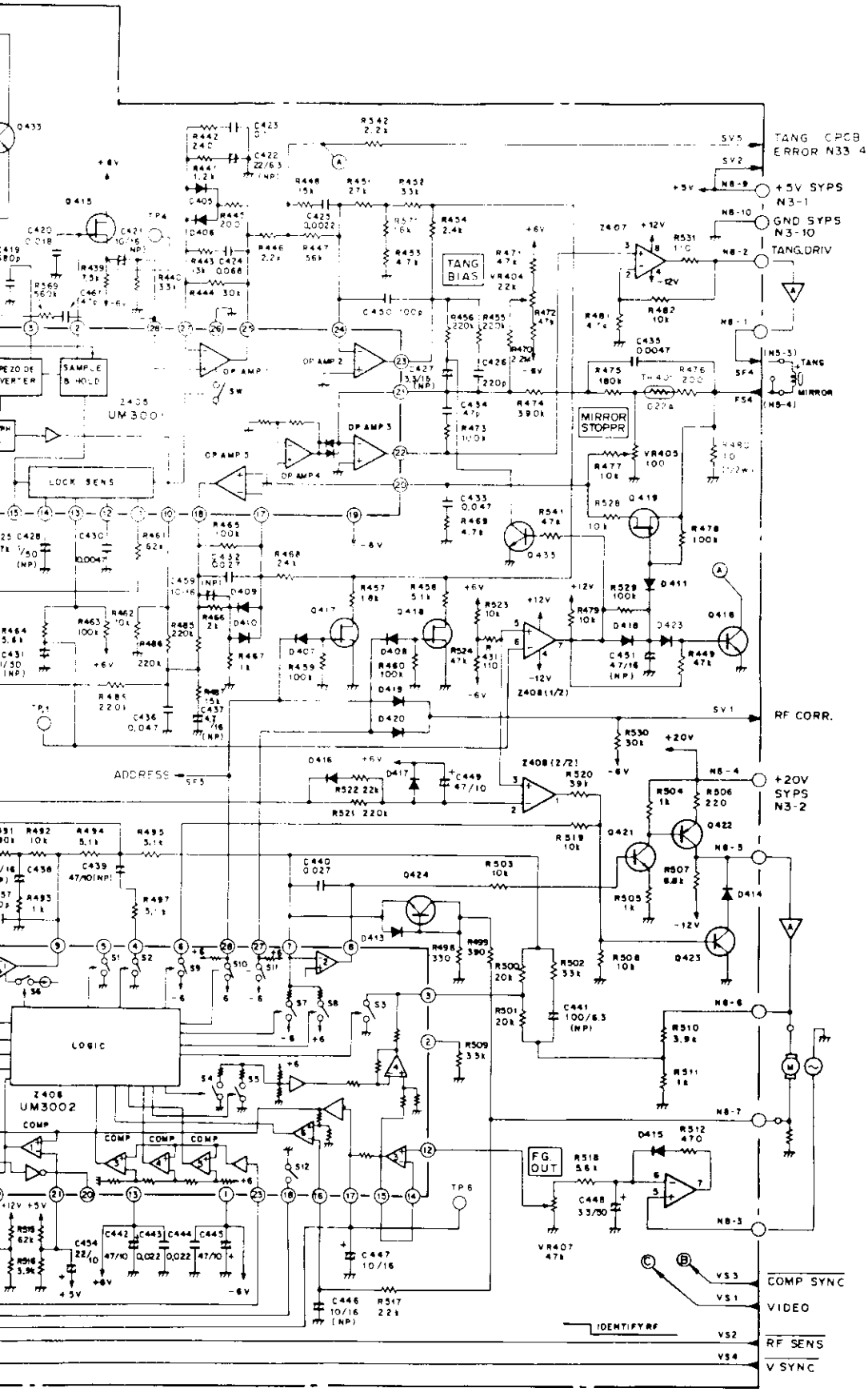

UM5003

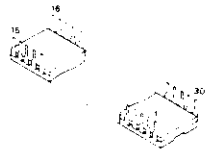

UM3001

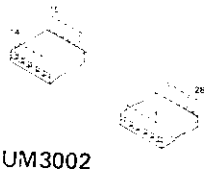

UM3002

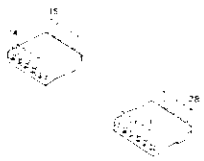

TC4024BP

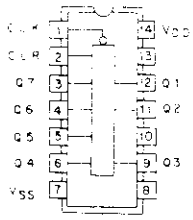

SN74LS107AN

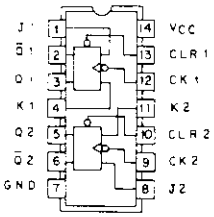

μPC393C

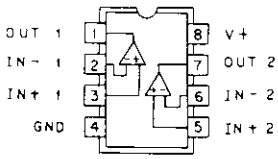

2SA1015
2SC1815

2SK30A

A B C D

1 2 3

A

PSCB (VWG-043)

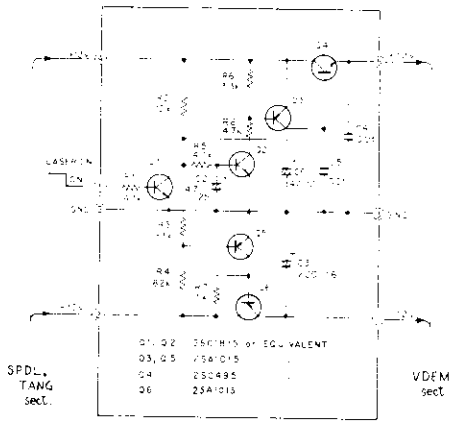

CPCB (VW

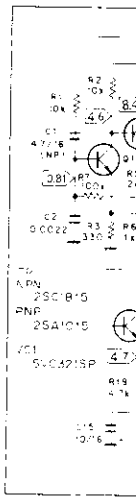

B

VSOP (VWS-022) VDEM SECTION

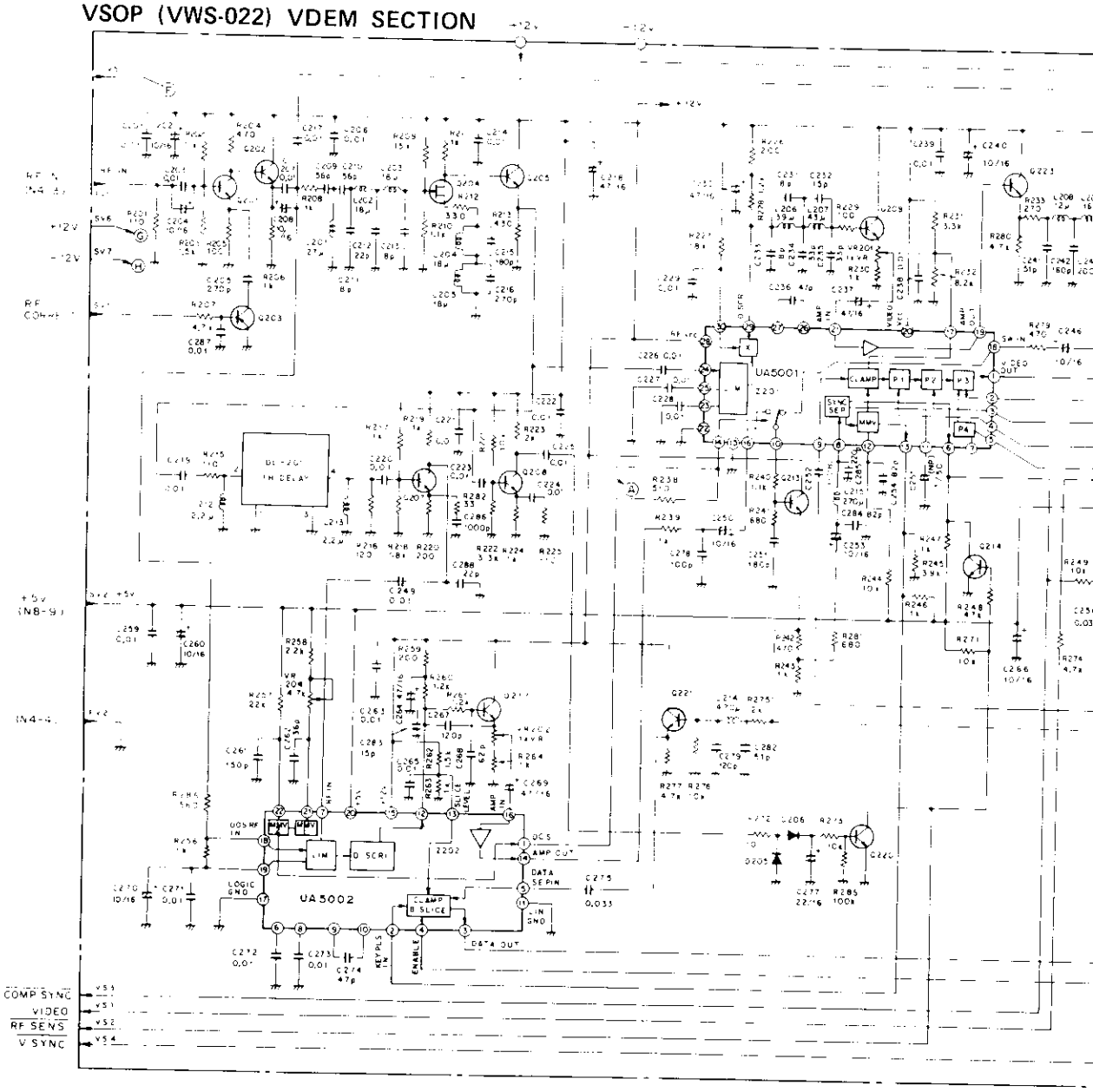

C

D

1 2 3

4 5

CPCB (VWV-023)

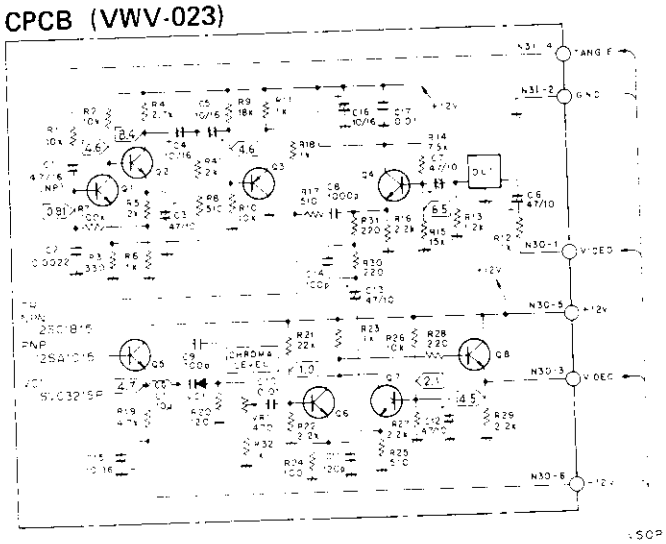

UA5001

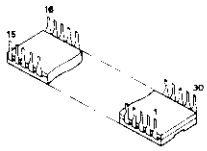

UA5002

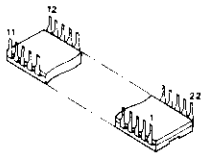

2SA1015
2SC1815

2SK19TM

A

B

C

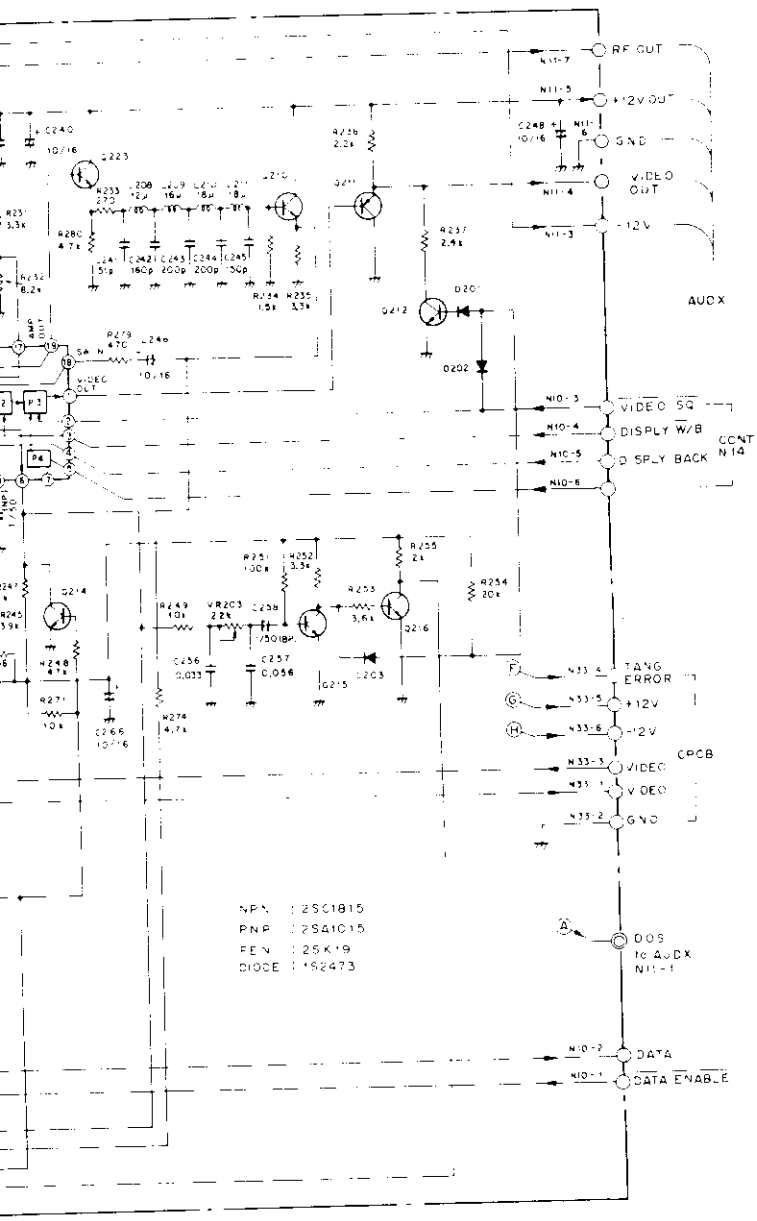

VSOP(VWS-022) Parts list 1

(MK)(Part No.)	(IT)(REF Nos. & DESCRIPTIONS)
UPC4558C	Z 1, 4,407
(NJM4558D)	
UPC4559C	Z 2
UPC393C	Z 3,408
(LM393P)	
UM4004	Z 5
UA5001	Z 201
UA5002	Z 202
TC4024BP	Z 401
(MB84024BM)	
UM5003	Z 403
HD74LS107P	Z 404
(SN74LS107AN)	
UM3001	Z 405
UM3002	Z 406
(UM3002A)	
2SK30A-GR/Y	Q 2,410,411,413-415,417-419
2SA1015-O/Y/GR	Q 3,203,211,404,406,422,423, 434
2SC1815-Y/GR	Q 8
2SK30A-Y	Q 10
2SC495-O/Y	Q 12,407
2SA505-O/Y	Q 13,408
2SK19TM-Y	Q 204
(2SK192A-Y)	
2SC1815-O/Y/GR	Q 217,221,424,433
2SC2320-E/F	Q 217,433
(2SC2603-E/F)	
1K60	D 1, 2
(OA90-R)	
1S2473	D 3- 10, 12, 15, 16,201-203, 205,206,403-423
WZ-090	D 14
WZ-048	D 18
RD6.8EB3	D 401,402
(XZ-068)	
(EQA01-07R2)	
RD1/4PM000J	R 1- 27, 29- 33, 36- 69, 71- 89, 92- 94, 96- 98,104,106, 108,109,111,112,115-118,201, 203-210

VSOP(VWS-022) Parts list 2

(MK)(Part No.)	(IT)(REF Nos. & DESCRIPTIONS)
RD1/2VS2R7J	R 28
RD1/2VS000J	R 90, 91,102,413,480,526
RD1/4PM000J	R 211-213,215-249,251,252,254- 264,271,273-277,279-282,285, 286,401-425,427-429,431-449
VCN-020	R 426 120/3W
RD1/4PM000J	R 451-479,481-495,497-512,515- 525,527-534,536-538,540,542, 544,550-566,568,569,571,753
RN1/4PR0000F	R 513,514
VCP-029	VR 1, 4, 9,407 47k
VCP-026	VR 2, 5,204,401 4.7k
VCP-024	VR 3,201,202 [illegible]k
VCP-027	VR 6, 7 10k
VCP-028	VR203,404,406 22k
VCP-023	VR405 470
CKDYF223Z50	C 1, 8, 19, 23, 35,406,407, 412,443,444,452
CEAR47M50NP	C 2, 11, 26, 38
CQMA103J50	C 3,418
CQMA153J50	C 5
CKDYF103Z50	C 6, 7, 29, 30, 33, 34,201, 203,206,207,214,217,219-229, 238,239,247,249,259,263,265, 271-273,287,411
CEA010M50NP	C 9, 15,255,258,428,431,464
CKDYB102K50	C 10,286,460
CEA010M50	C 12, 18
CQMA332J50	C 16,415
CQMA682J50	C 17
CQMA562J50	C 20
CQMA472J50	C 21,401,430,435
CQMA223J50	C 22
CEA4R7M16NP	C 24,437,438,451
CQMA333J50	C 25,256,275
CEA100M16	C 27, 28, 31, 32,202,204,208, 240,246,248,250,253,260,266, 270,277,447,463

(MK)(Part No.)	(IT)(REF Nos. & DESCRIPTIONS)
CQMA104J50	C 37,423
CCDCH470J50	C 39,274,467
CCDSL271J50	C 205,216
CCDCH560J50	C 209,210
CCDCH080D50	C 211,213,231,233
CCDCH220J50	C 212,288
CCDSL181J50	C 215,251,457
CEA470M16	C 218,230,264
CCDCH150J50	C 232
CCDCH330J50	C 234,235
CCDUJ470J50	C 236
CEA470M10	C 237,269,409,413,442,445,449, 458
CCDSL510J50	C 241,282
CCDSL161J50	C 242
CCDSL151J50	C 245,261
CQMA823J50	C 252
CCDSL820J50	C 254,284,417
CQMA563J50	C 257
CCDCH360J50	C 262
CCDSL121J50	C 267,279,405
CCDSL620J50	C 268
CCDSL101J50	C 278,403,404,450
CCDSL150J50	C 283
CCDSL221J50	C 285,426
CQMA183J50	C 402,420
CQMA272J50	C 408
CQMA122J50	C 410
CQSH102J50	C 414
CQSH681J50	C 416,419
CEA100M16NP	C 421,446,459
CEA220M6NP	C 422
CQMA683J50	C 424
CQMA222J50	C 425,455
CEA3R3M16NP	C 427
CQMA102J50	C 429
CQMA273J50	C 432,440
CQMA473J50	C 433,436,462
CCDSL470J50	C 434,456
CEA470M10NP	C 439
CEA101M6NP	C 441
CEA3R3M50	C 448
CEA220M10	C 454,465,467
VCE-007	C 461
CCDSL331J50	C 466
VCM-004 (VCM-005)	VC401 50pF

(MK)(Part No.)	(IT)(REF Nos. & DESCRIPTIONS)	
VTL-067 (VTL-051)	L 207	43uH
VTL-063 (VTL-056)	L 209	16uH
VTF-019 (VTF-022)	L 401	12uH
VSS-005 (VSS-010)	X 401	31.5kHz
D33A	TH 1	
D22A	TH401	
VKP-227	Conn.cords	
VKP-229	Conn.cords	
VKP-228	Conn.cords	
VTF-012 (VTF-013) (VTF-030)	DL 201 1H Dly	

PSCB(VWG-043) Parts list 1

(MK)(Part No.)	(IT)	(REF Nos. & DESCRIPTIONS)
2SC1815-Y/GR	Q	1, 2
(2SC2320-E/F)		
(2SC2603-E/F)		
2SA1015-Y/GR	Q	3, 5, 6
2SC495-O/Y	Q	4
RD1/4PM000J	R	1- 8
CEA4R7M25	C	2
CEA221M16	C	3
CKDYF103Z50	C	4, 5
CEA470M10	C	6

CPCB(VWV-023) Parts list 1

(MK)(Part No.)	(IT)	(REF Nos. & DESCRIPTIONS)
2SC1740-Q/R/S	Q	1, 2, 4- 8
(2SC1815-O/Y/GR		
2SA1015-O/Y/GR	Q	3
SVC321SP-B1/D1	D	1
RD1/4PM000J	R	1- 32, 41
VCP-023	VR	1 470
CEA4R7M16NP	C	1
CKDYB222K50	C	2
CEA470M10	C	3, 6, 7, 12, 13
CEA100M16	C	4, 5, 15, 16
CKDYB102K50	C	8
CCDSL101J50	C	9, 14
CKDYF103Z50	C	10, 17
CCDSL121J50	C	11
VTL-023	L	1 10uH
(VTL-061)		
VTF-032		0.5uS Dly

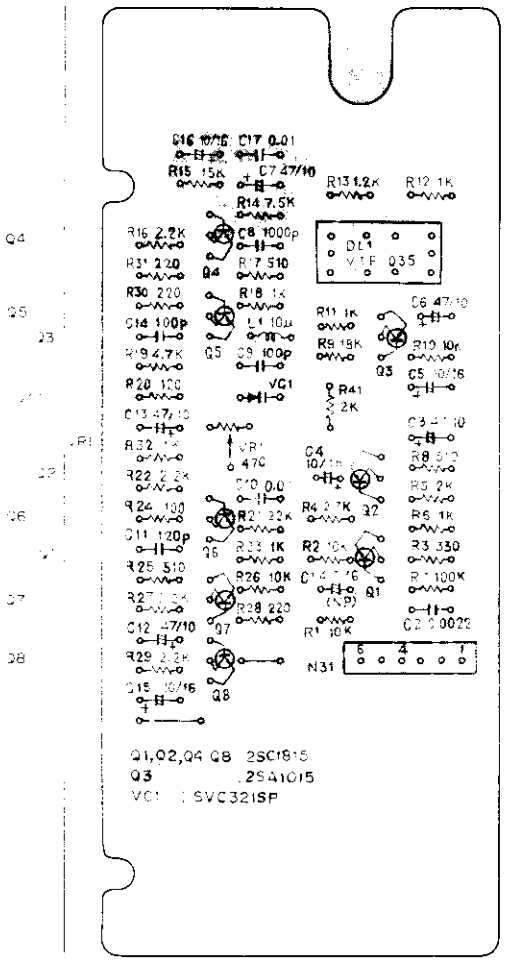
Q1,Q2,Q4 Q8 2SC1815
Q3 2SA1015
VC1 SVC321SP

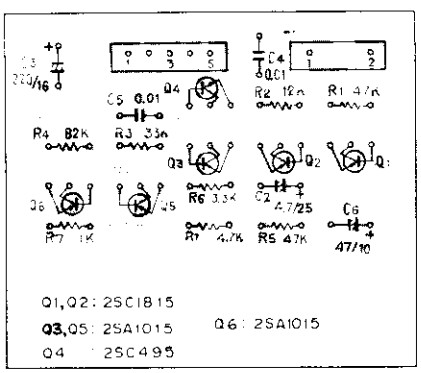
Q1,Q2: 2SC1815
Q3,Q5: 2SA1015
Q6: 2SA1015
Q4 2SC495

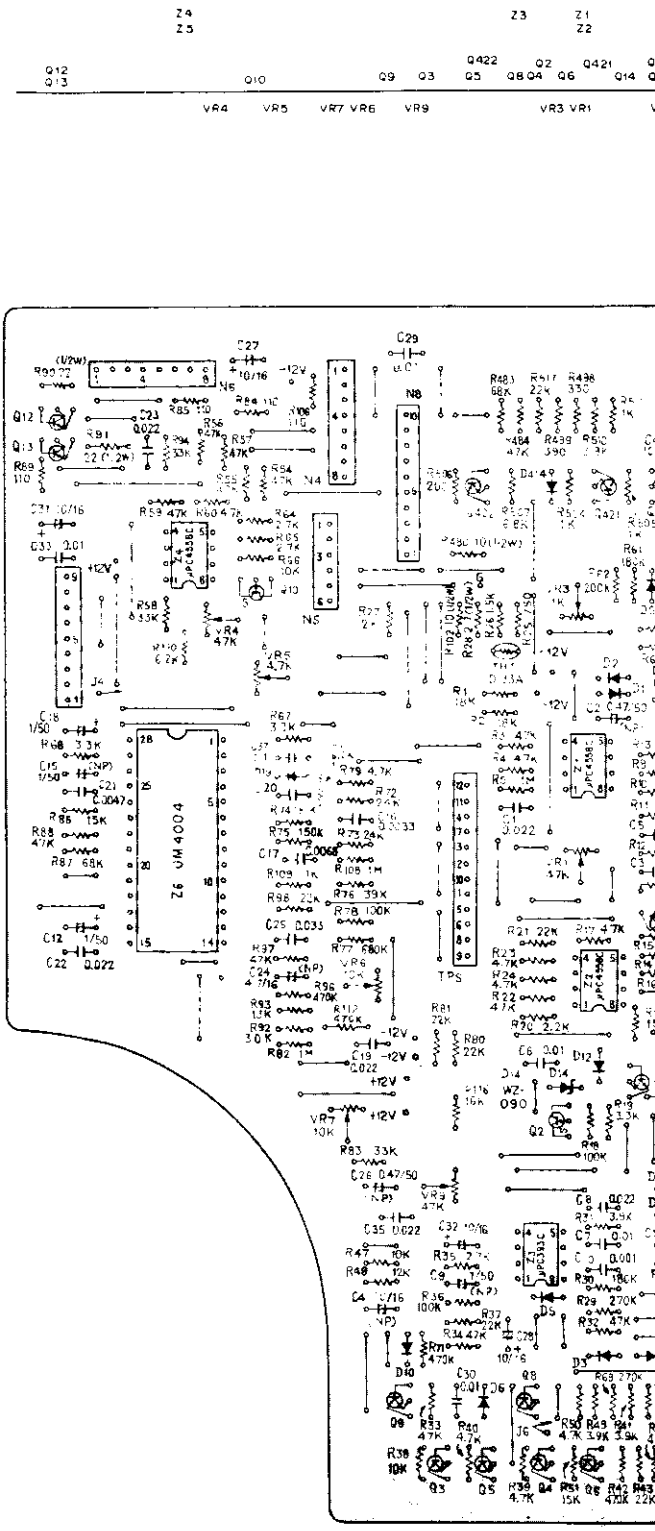

3 4 5

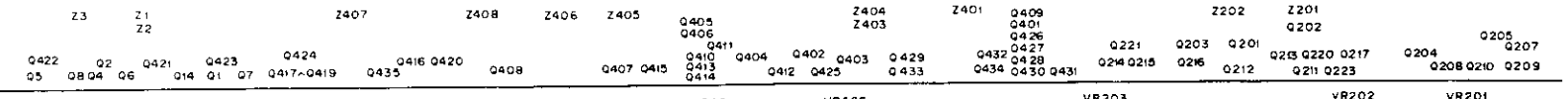
Z3
Z1
Z2
Z407
Z408
Z406
Z405
Z404
Z403
Z401
Z202
Z201
Q422
Q5
Q2
Q8 Q4
Q6
Q421
Q14
Q423
Q1
Q7
Q424
Q417-Q419
Q416 Q420
Q435
Q408
Q407 Q415
Q405
Q406
Q411
Q410
Q413
Q414
Q404
Q412
Q402
Q425
Q403
Q429
Q433
Q432
Q434
Q409
Q401
Q426
Q427
Q428
Q430 Q431
Q221
Q214 Q215
Q203
Q216
Q201
Q212
Q213 Q220 Q217
Q211 Q223
Q202
Q204
Q208 Q210
Q205
Q207
Q209
VR3 VR1
VR2
VR403 VR407
VR405
VR404
VR401
VR406
VR203
VR202
VR204
VR201

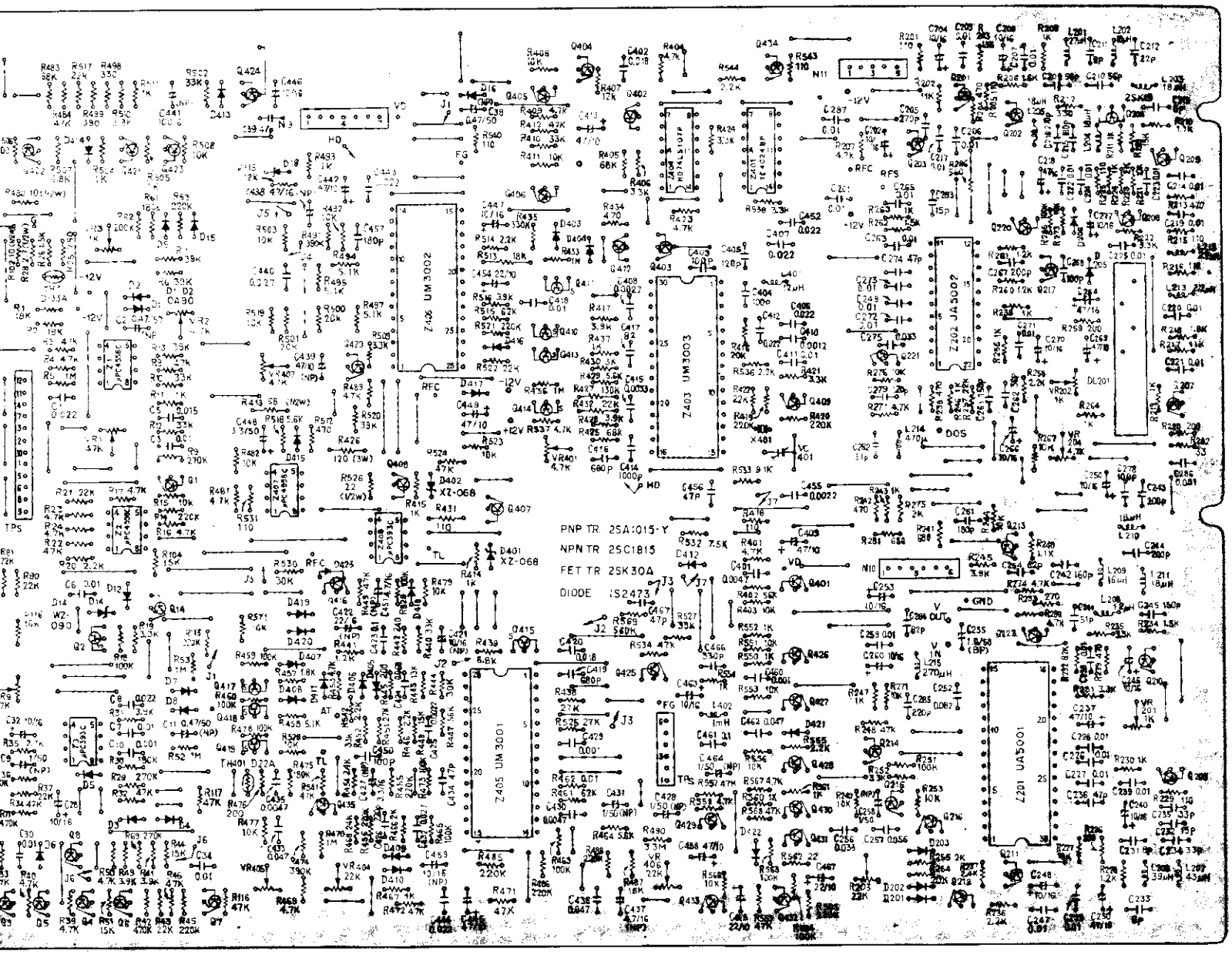
PNP TR 2SA1015-Y
NPN TR 2SC1815
FET TR 2SK30A
DIODE 1S2473
Z406 UM3002
Z403 UM3003
Z405 UM3001
Z202 JA3002
Z201 UA3001

11-5 AUDX

AUDX (VWV-044)

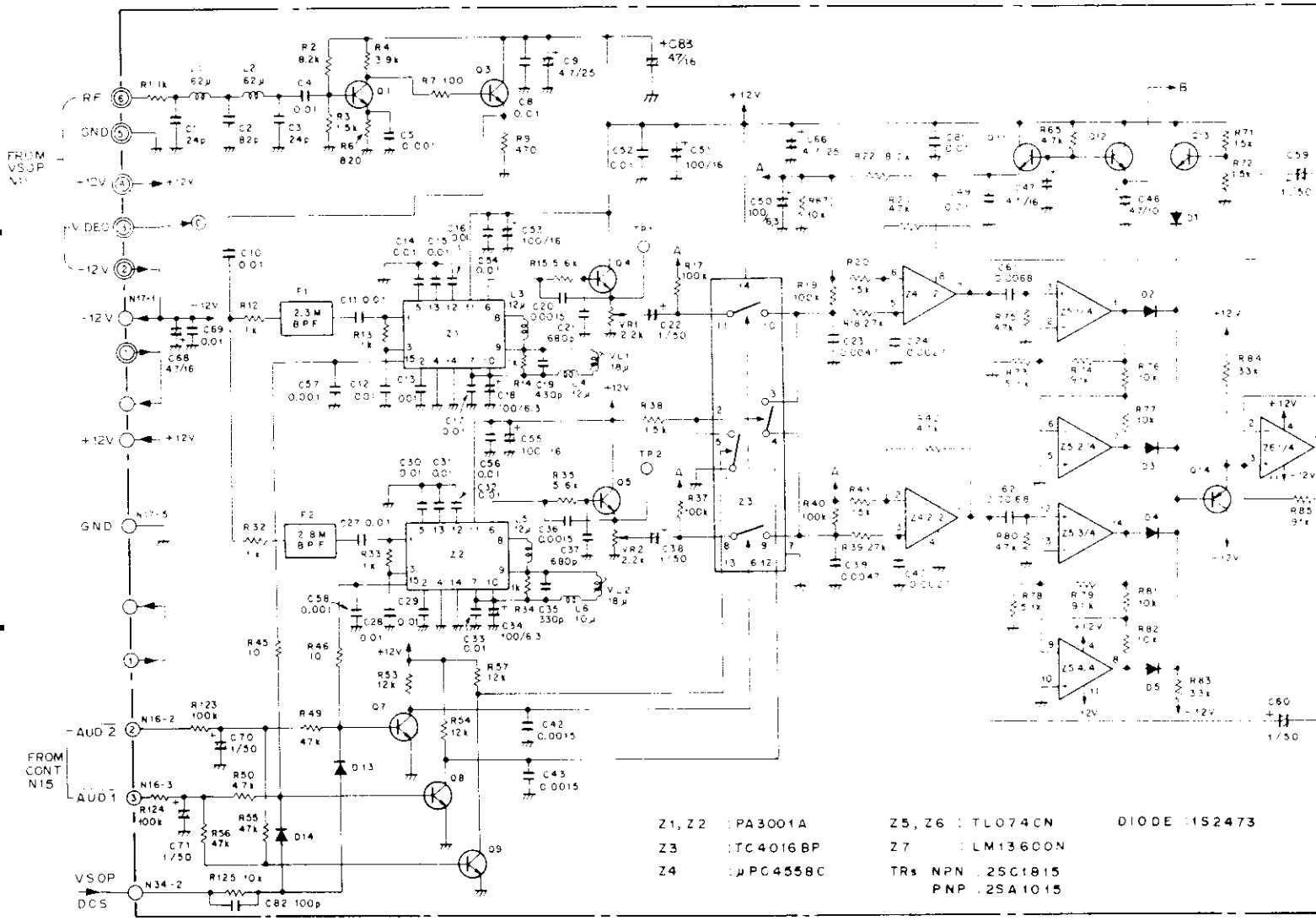

D

2SA1015
2SC1815

LM13600N

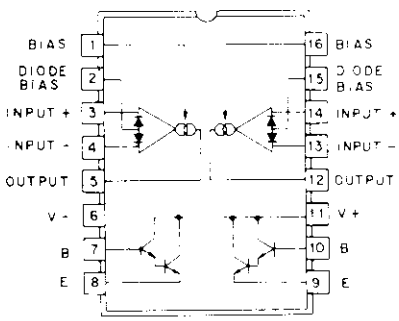

TL074CN
LF347N

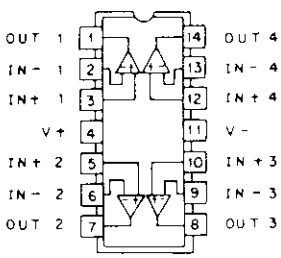

TC4016

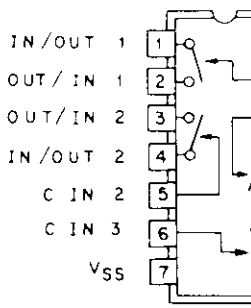

A

B

C

D

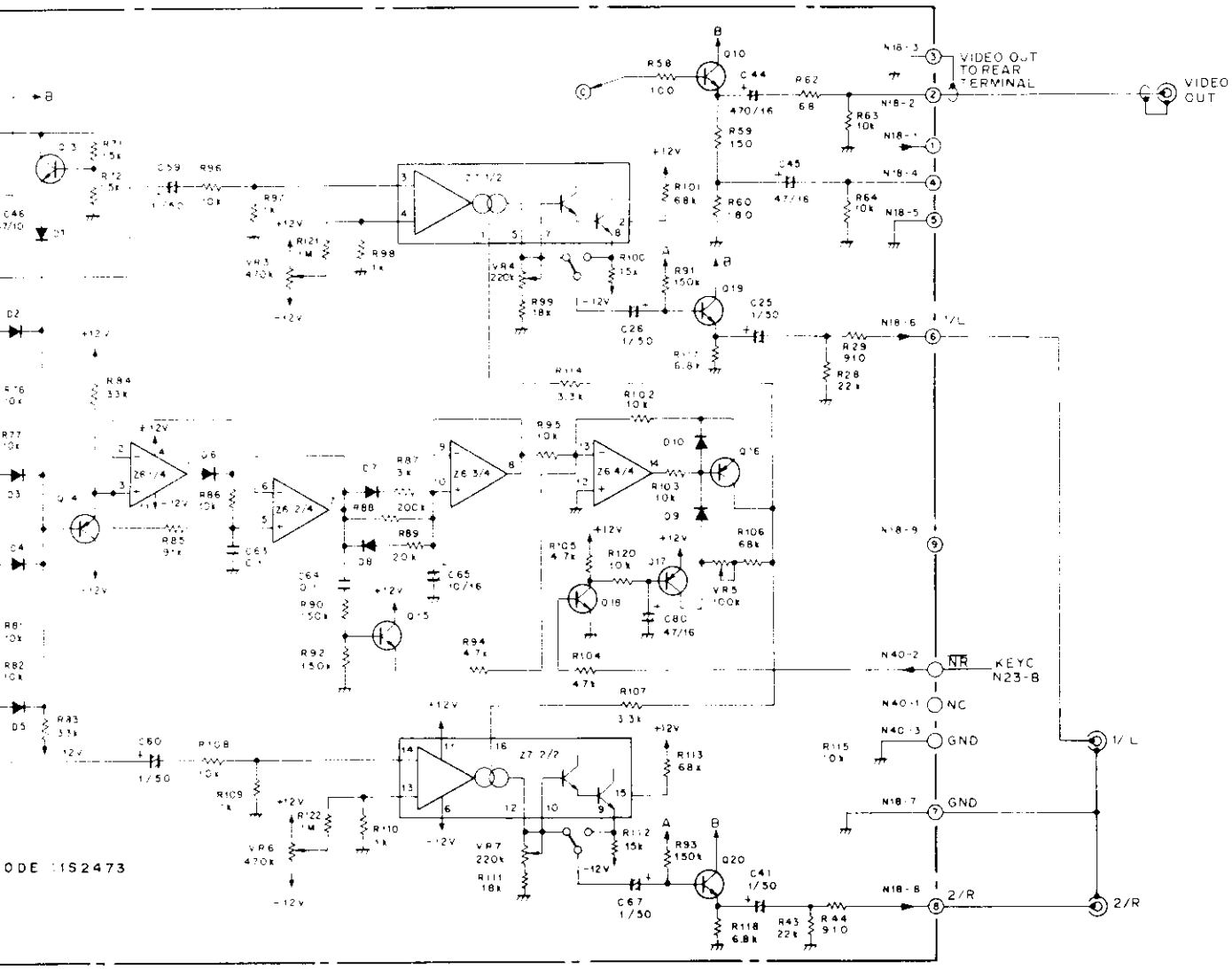

TC4016BP

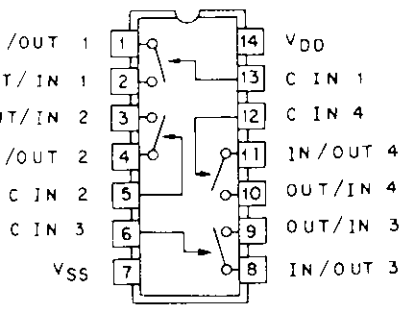

PA3001A

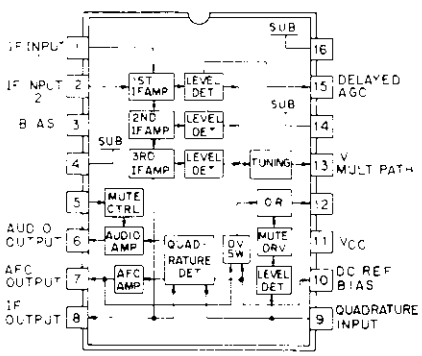

μPC4558C
NJM4558D

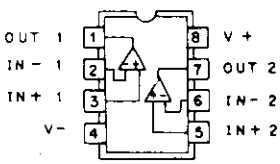

AUDX(VWV-044) Parts list 1

(MK)(Part No.)	(IT)	(REF Nos. & DESCRIPTIONS)	
PA3001A	Z	1, 2	
TC40168P	Z	3	
UPC4558C	Z	4	
(NJM4558D)			
TL074CN	Z	5, 6	
(LF347N)			
LM13600J	Z	7	
(LM13600N)			
(LM13700N)			
2SC1815-Y/GR	Q	1, 3, 10	
2SC1815-O/Y/GR	Q	4, 5, 7- 9, 11- 13, 15, 18- 20	
(2SC2320-E/F)			
(2SC2603-E/F)			
2SA1015-O/Y/GR	Q	14, 16, 17	
1S2473	D	1- 10, 13, 14	
RD1/4PM000J	R	1- 4, 6, 7, 9, 12- 15, 17- 22, 28, 29, 32- 35, 37- 46, 49, 50, 53- 60, 62- 65, 67, 71-114,117,118,120-125	
VCP-025	VR	1, 2	2.2k
VCP-032	VR	3, 6	470k
VCP-031	VR	4, 7	220k
VCP-030	VR	5	100k
CKDYF103Z50	C	2, 8, 10- 17, 27- 31, 33, 49, 52, 54, 56, 69, 81	
CCDCH820J50	C	2	
CKDYB102K50	C	5, 57, 58, 82, 84	
CEA4R7M25	C	9, 66	
CEA101M6R3	C	18, 34, 50	
CCDSL431J50	C	19	
CQMA152J50	C	20, 36	
CKDYB681K50	C	21, 37	
CEA010M50	C	22, 25, 26, 38, 41, 59, 60, 67, 70, 71	
CQMA472J50	C	23, 39	
CQMA272J50	C	24, 40	
CCDSL331J50	C	35	
CKDYB152K50	C	42, 43	
CEA471M16	C	44	
CEA470M16	C	45- 47, 68, 80, 83	
CEA101M16	C	51, 53, 55	
CQMA682J50	C	61, 62	
CQMA104J50	C	63, 64	
VCH-011	C	65	
VTL-048	L	1, 2	62uH
(VTL-068)			
VTL-024	L	3- 5	12uH
(VTL-062)			
VTL-023	L	6	10uH
(VTL-061)			
VTF-006	VL	1, 2	18uH
(VTF-021)			
VTF-017	F	1	2.3M B.P.F
(VTF-023)			
VTF-018	F	2	2.8M B.P.F
(VTF-024)			

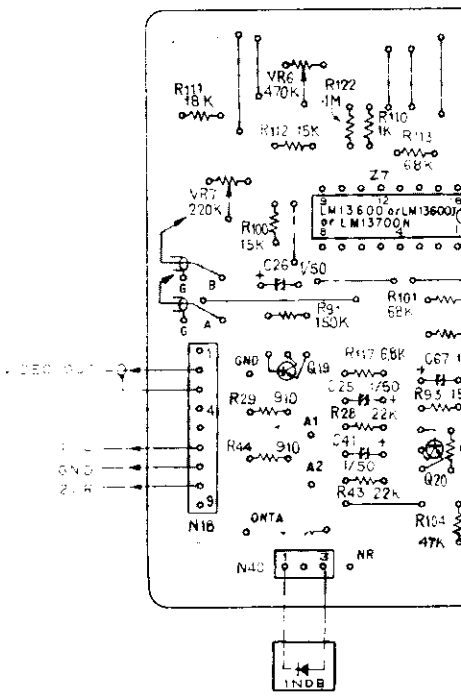

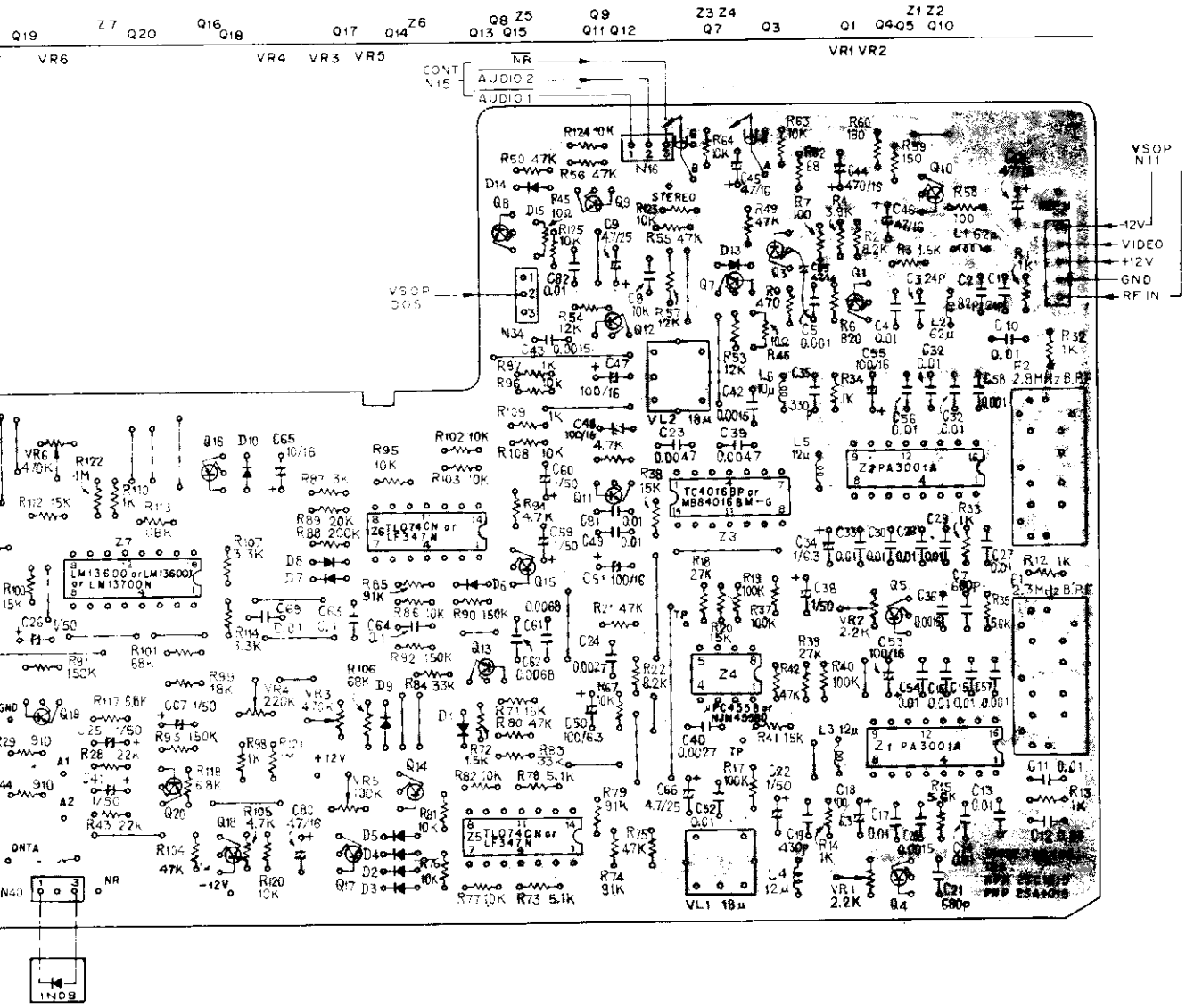
CONT N15
AUDIO 2
AUDIO 1
NR
STEREO
VSOP N11
12V
VIDEO
+12V
GND
RF IN
VSOP D05
TC4016BP or MB84016BM-G
Z2 PA3001A
Z1 PA3001A
LM13600 or LM13600N or LM13700N
TL074CN or LF347N
VL2 18μ
VL1 18μ
F2 2.8MHz B.P.F
F1 2.3MHz B.P.F
1N08

11-6 CONT, GATB AND IOIB

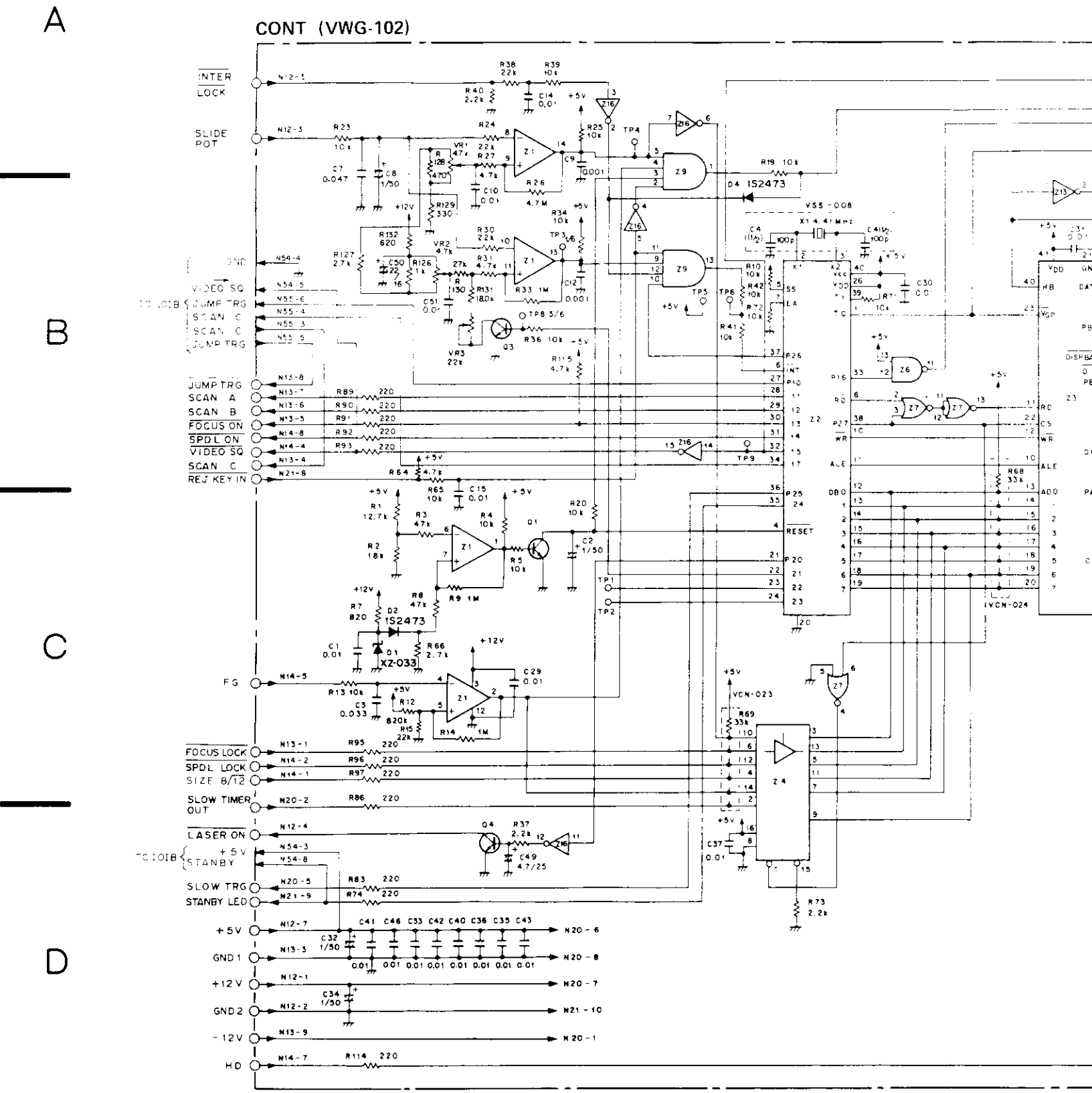

GATB (VWG-044)

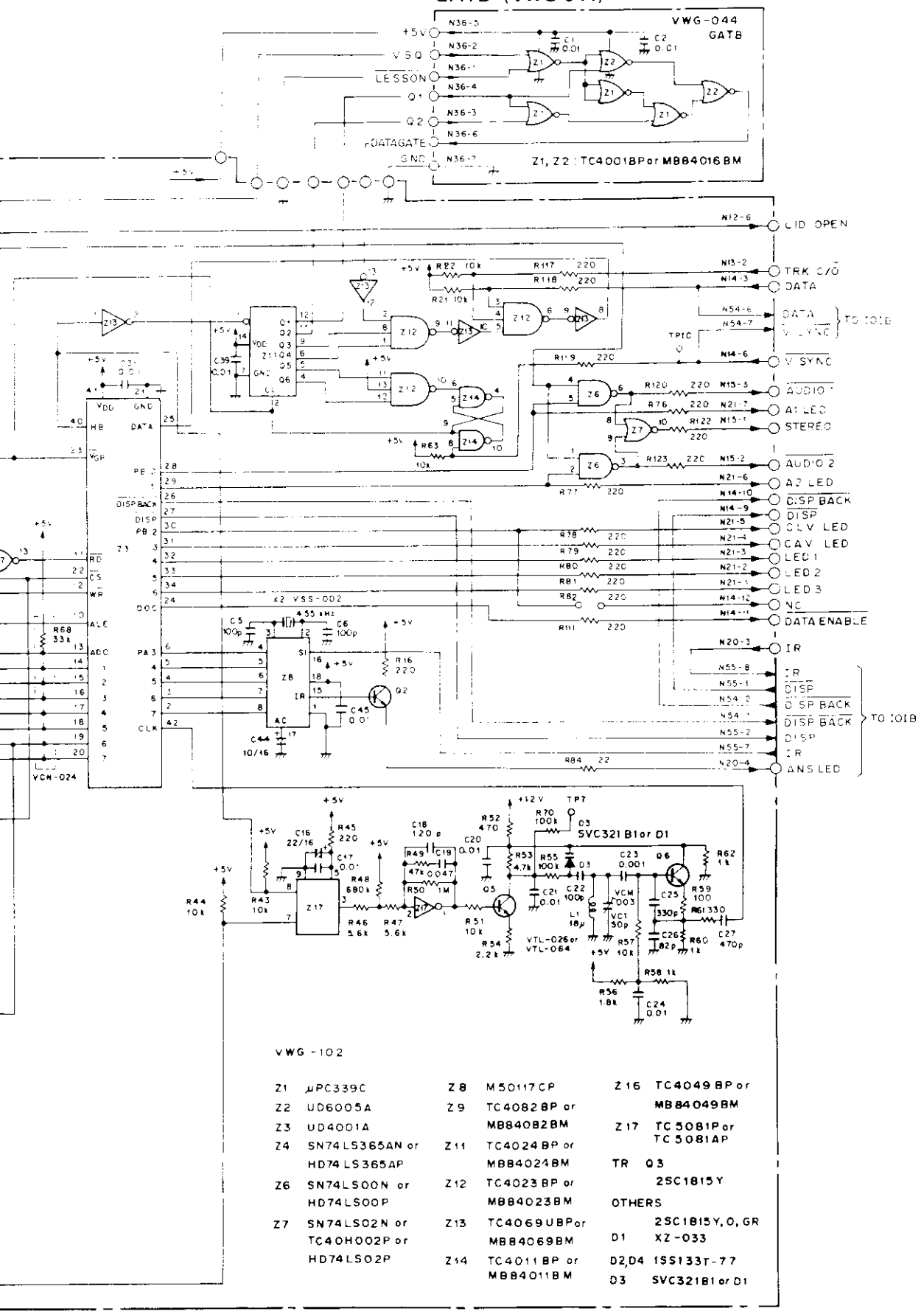
VWG-044
GATB
+5V
VSQ
LESSON
Q1
Q2
DATAGATE
GND
Z1, Z2 : TC4001BP or MB84016BM
CID OPEN
TRK C/O
DATA
TO 101B
V SYNC
AUDIO 1
A1 LED
STEREO
AUDIO 2
A2 LED
DISP BACK
DISP
CLV LED
CAV LED
LED 1
LED 2
LED 3
NC
DATA ENABLE
IR
TO 101B
ANS LED
X2 VSS-002
VCN-024
VTL-026 or VTL-064
SVC321B1 or D1
VWG-102
Z1 μPC339C
Z2 UD6005A
Z3 UD4001A
Z4 SN74LS365AN or HD74LS365AP
Z6 SN74LS00N or HD74LS00P
Z7 SN74LS02N or TC40H002P or HD74LS02P
Z8 M50117CP
Z9 TC4082BP or MB84082BM
Z11 TC4024BP or MB84024BM
Z12 TC4023BP or MB84023BM
Z13 TC4069UBP or MB84069BM
Z14 TC4011BP or MB84011BM
Z16 TC4049BP or MB84049BM
Z17 TC5081P or TC5081AP
TR Q3 2SC1815Y
OTHERS
D1 2SC1815Y, O, GR XZ-033
D2, D4 1SS133T-77
D3 SVC321B1 or D1

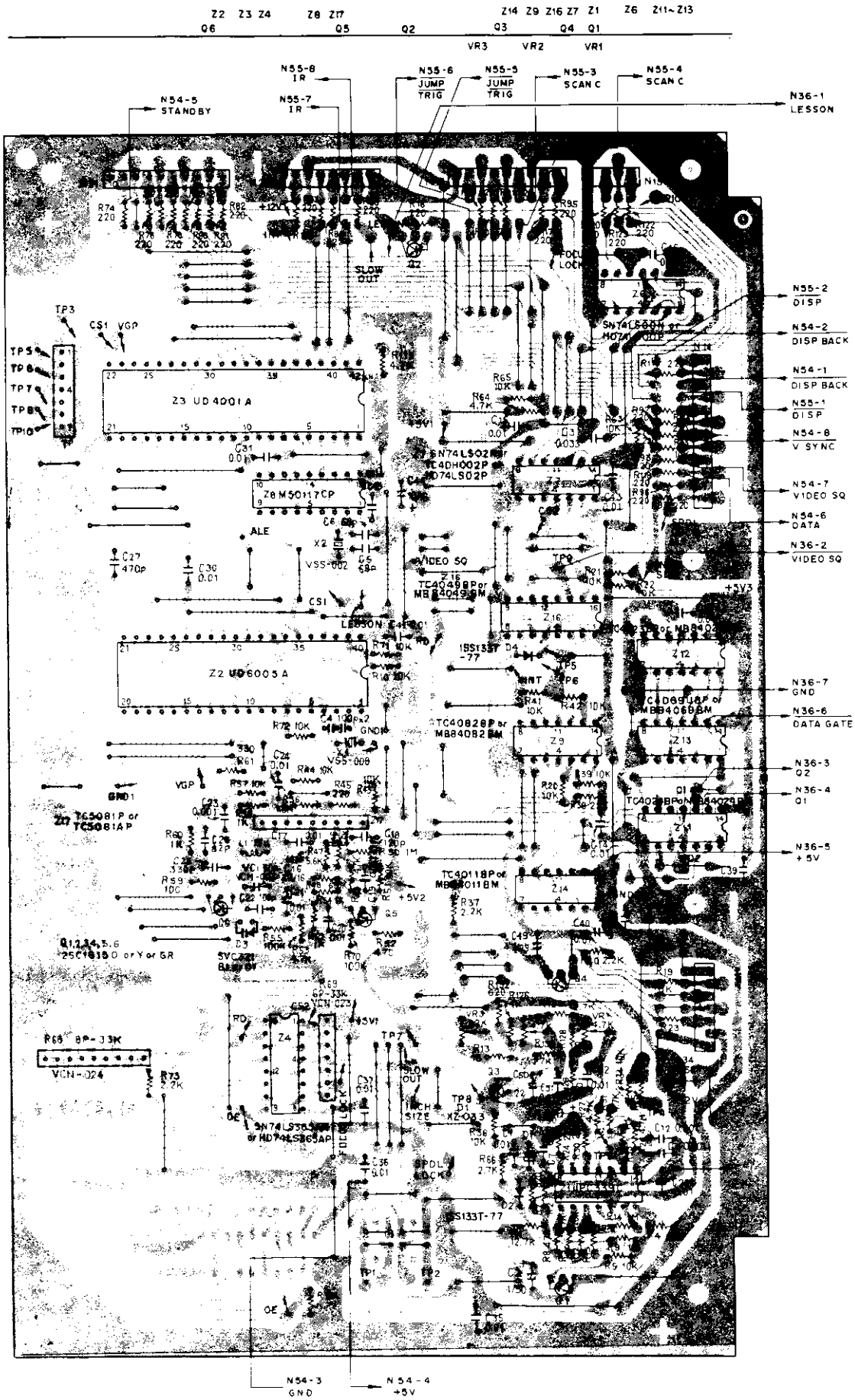
Z2 Z3 Z4 Z8 Z17 Z14 Z9 Z16 Z7 Z1 Z6 Z11~Z13
Q6 Q5 Q2 Q3 Q4 Q1
VR3 VR2 VR1
N55-8 IR
N55-7 IR
N55-6 JUMP TRIG
N55-5 JUMP TRIG
N55-3 SCAN C
N55-4 SCAN C
N54-5 STANDBY
N36-1 LESSON
N55-2 DISP
N54-2 DISP BACK
N54-1 DISP BACK
N55-1 DISP
N54-8 V SYNC
N54-7 VIDEO SQ
N54-6 DATA
N36-2 VIDEO SQ
N36-7 GND
N36-6 DATA GATE
N36-3 Q2
N36-4 Q1
N36-5 +5V
N54-3 GND
N54-4 +5V
Z3 UD4001A
Z8 M50117CP
Z2 UD6003A
Z7 TC5081P or TC5081AP
Z4 SN74LS365AP or HD74LS365AP
TC40828P or MB84082BM
TC40118P or MB84011BM
TC4069UBP or MB84069BM
TC4049BP or MB84049BM
TC4002BP or MB84002BM
SN74LS02P or HD74LS02P
SN74LS86P or HD74LS86P
1SS133T-77
2SC1815 D or Y or GR
VCN-024
VCN-023
SLOW OUT
PDL LOCK
TP3
TP5
TP6
TP7
TP8
TP10
CS1
VGP
ALE
VIDEO SQ
LESSON
+5V3
+5V2
+5V1
GND1
X2
VSS-002
VSS-008
R68 8P-33K
R73 2.7K
R70 100K
R69 62-33K
R59 100
R37 2.2K
R71 10K
R72 10K
R41 10K
R42 10K
R64 4.7K
R65 10K
R66 2.7K
R74 220
R82 220
R95 220
R76 220
C27 470P
C30 0.01
C31 0.01
C24 0.01
C36 0.01
C32 0.01
C39
C40
C49
C52
C53
C54
C55
C56
C57
C58
C59
C60
C61
C62
C63
C64
C65
C66
C67
C68
C69
C70
C71
C72
C73
C74
C75
C76
C77
C78
C79
C80
C81
C82
C83
C84
C85
C86
C87
C88
C89
C90
C91
C92
C93
C94
C95
C96
C97
C98
C99
C100
C101
C102
C103
C104
C105
C106
C107
C108
C109
C110
C111
C112
C113
C114
C115
C116
C117
C118
C119
C120
C121
C122
C123
C124
C125
C126
C127
C128
C129
C130
C131
C132
C133
C134
C135
C136
C137
C138
C139
C140
C141
C142
C143
C144
C145
C146
C147
C148
C149
C150
C151
C152
C153
C154
C155
C156
C157
C158
C159
C160
C161
C162
C163
C164
C165
C166
C167
C168
C169
C170
C171
C172
C173
C174
C175
C176
C177
C178
C179
C180
C181
C182
C183
C184
C185
C186
C187
C188
C189
C190
C191
C192
C193
C194
C195
C196
C197
C198
C199
C200
C201
C202
C203
C204
C205
C206
C207
C208
C209
C210
C211
C212
C213
C214
C215
C216
C217
C218
C219
C220
C221
C222
C223
C224
C225
C226
C227
C228
C229
C230
C231
C232
C233
C234
C235
C236
C237
C238
C239
C240
C241
C242
C243
C244
C245
C246
C247
C248
C249
C250
C251
C252
C253
C254
C255
C256
C257
C258
C259
C260
C261
C262
C263
C264
C265
C266
C267
C268
C269
C270
C271
C272
C273
C274
C275
C276
C277
C278
C279
C280
C281
C282
C283
C284
C285
C286
C287
C288
C289
C290
C291
C292
C293
C294
C295
C296
C297
C298
C299
C300
C301
C302
C303
C304
C305
C306
C307
C308
C309
C310
C311
C312
C313
C314
C315
C316
C317
C318
C319
C320
C321
C322
C323
C324
C325
C326
C327
C328
C329
C330
C331
C332
C333
C334
C335
C336
C337
C338
C339
C340
C341
C342
C343
C344
C345
C346
C347
C348
C349
C350
C351
C352
C353
C354
C355
C356
C357
C358
C359
C360
C361
C362
C363
C364
C365
C366
C367
C368
C369
C370
C371
C372
C373
C374
C375
C376
C377
C378
C379
C380
C381
C382
C383
C384
C385
C386
C387
C388
C389
C390
C391
C392
C393
C394
C395
C396
C397
C398
C399
C400
C401
C402
C403
C404
C405
C406
C407
C408
C409
C410
C411
C412
C413
C414
C415
C416
C417
C418
C419
C420
C421
C422
C423
C424
C425
C426
C427
C428
C429
C430
C431
C432
C433
C434
C435
C436
C437
C438
C439
C440
C441
C442
C443
C444
C445
C446
C447
C448
C449
C450
C451
C452
C453
C454
C455
C456
C457
C458
C459
C460
C461
C462
C463
C464
C465
C466
C467
C468
C469
C470
C471
C472
C473
C474
C475
C476
C477
C478
C479
C480
C481
C482
C483
C484
C485
C486
C487
C488
C489
C490
C491
C492
C493
C494
C495
C496
C497
C498
C499
C500
C501
C502
C503
C504
C505
C506
C507
C508
C509
C510
C511
C512
C513
C514
C515
C516
C517
C518
C519
C520
C521
C522
C523
C524
C525
C526
C527
C528
C529
C530
C531
C532
C533
C534
C535
C536
C537
C538
C539
C540
C541
C542
C543
C544
C545
C546
C547
C548
C549
C550
C551
C552
C553
C554
C555
C556
C557
C558
C559
C560
C561
C562
C563
C564
C565
C566
C567
C568
C569
C570
C571
C572
C573
C574
C575
C576
C577
C578
C579
C580
C581
C582
C583
C584
C585
C586
C587
C588
C589
C590
C591
C592
C593
C594
C595
C596
C597
C598
C599
C600
C601
C602
C603
C604
C605
C606
C607
C608
C609
C610
C611
C612
C613
C614
C615
C616
C617
C618
C619
C620
C621
C622
C623
C624
C625
C626
C627
C628
C629
C630
C631
C632
C633
C634
C635
C636
C637
C638
C639
C640
C641
C642
C643
C644
C645
C646
C647
C648
C649
C650
C651
C652
C653
C654
C655
C656
C657
C658
C659
C660
C661
C662
C663
C664
C665
C666
C667
C668
C669
C670
C671
C672
C673
C674
C675
C676
C677
C678
C679
C680
C681
C682
C683
C684
C685
C686
C687
C688
C689
C690
C691
C692
C693
C694
C695
C696
C697
C698
C699
C700
C701
C702
C703
C704
C705
C706
C707
C708
C709
C710
C711
C712
C713
C714
C715
C716
C717
C718
C719
C720
C721
C722
C723
C724
C725
C726
C727
C728
C729
C730
C731
C732
C733
C734
C735
C736
C737
C738
C739
C740
C741
C742
C743
C744
C745
C746
C747
C748
C749
C750
C751
C752
C753
C754
C755
C756
C757
C758
C759
C760
C761
C762
C763
C764
C765
C766
C767
C768
C769
C770
C771
C772
C773
C774
C775
C776
C777
C778
C779
C780
C781
C782
C783
C784
C785
C786
C787
C788
C789
C790
C791
C792
C793
C794
C795
C796
C797
C798
C799
C800
C801
C802
C803
C804
C805
C806
C807
C808
C809
C810
C811
C812
C813
C814
C815
C816
C817
C818
C819
C820
C821
C822
C823
C824
C825
C826
C827
C828
C829
C830
C831
C832
C833
C834
C835
C836
C837
C838
C839
C840
C841
C842
C843
C844
C845
C846
C847
C848
C849
C850
C851
C852
C853
C854
C855
C856
C857
C858
C859
C860
C861
C862
C863
C864
C865
C866
C867
C868
C869
C870
C871
C872
C873
C874
C875
C876
C877
C878
C879
C880
C881
C882
C883
C884
C885
C886
C887
C888
C889
C890
C891
C892
C893
C894
C895
C896
C897
C898
C899
C900
C901
C902
C903
C904
C905
C906
C907
C908
C909
C910
C911
C912
C913
C914
C915
C916
C917
C918
C919
C920
C921
C922
C923
C924
C925
C926
C927
C928
C929
C930
C931
C932
C933
C934
C935
C936
C937
C938
C939
C940
C941
C942
C943
C944
C945
C946
C947
C948
C949
C950
C951
C952
C953
C954
C955
C956
C957
C958
C959
C960
C961
C962
C963
C964
C965
C966
C967
C968
C969
C970
C971
C972
C973
C974
C975
C976
C977
C978
C979
C980
C981
C982
C983
C984
C985
C986
C987
C988
C989
C990
C991
C992
C993
C994
C995
C996
C997
C998
C999
C1000

CONT(VWG-102) Parts list 1

(MK)(Part No.)	(IT)	(REF Nos. & DESCRIPTIONS)	
UPC339C	Z	1	
UD6005A	Z	2	
UD4001	Z	3	
SN74LS365AN	Z	4	
(HD74LS365AP)			
SN74LS00N	Z	6	
(HD74LS00P)			
SN74LS02N	Z	7	
(TC40H002P)			
(HD74LS02P)			
M50117CP	Z	8	
TC4082BP	Z	9	
(MB84082BM)			
TC4024BP	Z	11	
(MB84024BM)			
TC4023BP	Z	12	
(MB84023BM)			
TC4069UBP	Z	13	
(MB84069BM)			
TC4011BP	Z	14	
(MB84011BM)			
TC4049BP	Z	16	
(MB84049BM)			
TC5081P	Z	17	
(TC5081AP)			
2SC1815-O/Y/GR	Q	1- 6	
(2SC1740-Q/R)R			
XZ-033	D	1	
(RD3.3EB1)			
1S2473	D	2, 4	
SVC321SP-B1/D1	D	3	
RN1/4PR0000F	R	1, 2,131	
RD1/4PM000J	R	3- 5, 7- 10, 12- 16, 19- 27, 30, 31, 33, 34, 36- 66, 70- 74, 76- 84, 86, 89- 93, 95- 97,111,114,115,117-120, 122,123,126-130,132	
VCN-024	R	68	33k Array
VCN-023	R	69	33k Array
VCP-026	VR	1, 2	4.7k
VCP-028	VR	3	22k
CKDYF103Z50	C	1, 14, 15, 17, 20, 21, 24, 29- 31, 33, 35- 37, 39- 43, 45, 46, 51, 52	
CEA010M50	C	2, 8, 32, 34	
CKDYF333Z50	C	3	
CCDSL101J50	C	5, 6, 22	
CQMA473K50	C	7, 19	
CKDYB102K50	C	9, 12, 23	
CEA220M16	C	16, 50	
CCDSL121J50	C	18	
CKDYB331K50	C	25	
CCDSL820J50	C	26	
CKDYB471K50	C	27	
CEA100M16	C	44	
CEA4R7M25	C	49	
VCM-003	VC	1	50PF
VTL-026	L	1	18uH
(VTL-064)			
VSS-008	X	1	4.41MHz
VSS-002	X	2	455kHz

GATB(VWG-044) Parts list 1

(MK)(Part No.)	(IT)	(REF Nos. & DESCRIPTIONS)
TC4001BP	Z	1, 2
(MB84001BM)		
CKDYF103Z50	C	1, 2

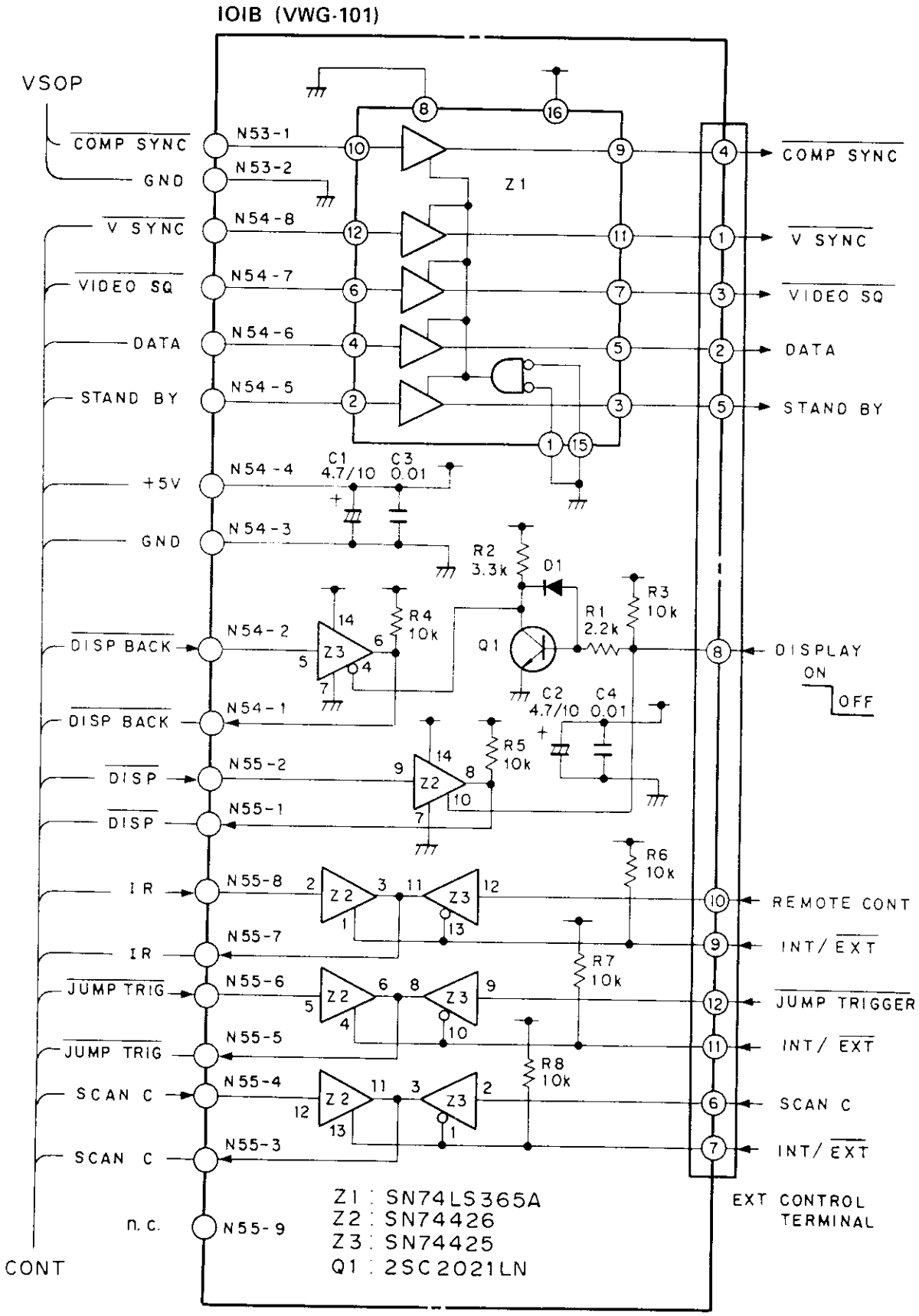
IOIB (VWG-101)
VSOP
COMP SYNC
GND
V SYNC
VIDEO SQ
DATA
STAND BY
+5V
GND
DISP BACK
DISP BACK
DISP
DISP
IR
IR
JUMP TRIG
JUMP TRIG
SCAN C
SCAN C
n. c.
CONT
N53-1
N53-2
N54-8
N54-7
N54-6
N54-5
N54-4
N54-3
N54-2
N54-1
N55-2
N55-1
N55-8
N55-7
N55-6
N55-5
N55-4
N55-3
N55-9
Z1
Z2
Z3
C1 4.7/10
C3 0.01
R2 3.3k
D1
R3 10k
R1 2.2k
R4 10k
Q1
C2 4.7/10
C4 0.01
R5 10k
R6 10k
R7 10k
R8 10k
COMP SYNC
V SYNC
VIDEO SQ
DATA
STAND BY
DISPLAY ON OFF
REMOTE CONT
INT/ EXT
JUMP TRIGGER
INT/ EXT
SCAN C
INT/ EXT
EXT CONTROL TERMINAL
Z1 : SN74LS365A
Z2 : SN74426
Z3 : SN74425
Q1 : 2SC2021LN

P SYNC

YNC

EO SQ

A

ND BY

LAY

OFF

TE CONT

/ EXT

TRIGGER

/ EXT

N C

/ EXT

TROL
MINAL

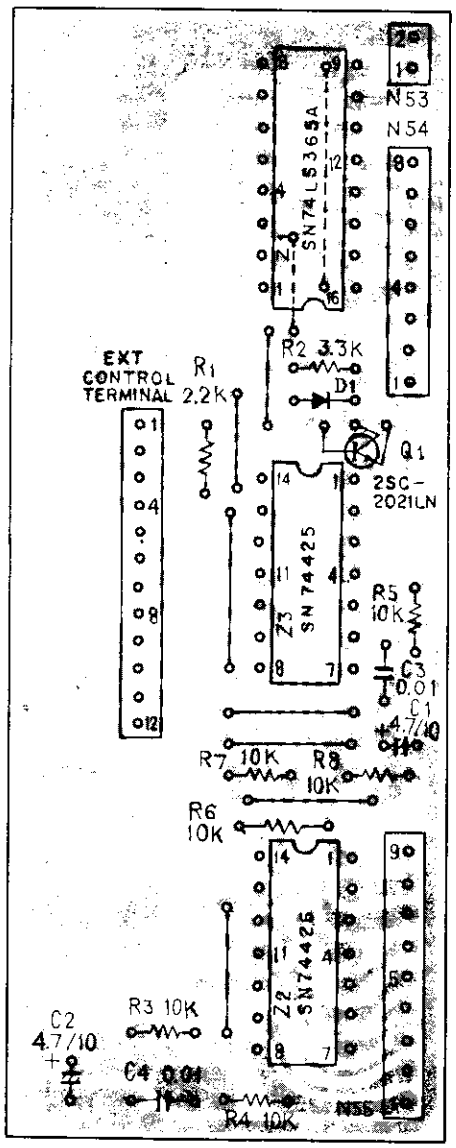

IOIB(VWG-101) Parts list 1

(MK)(Part No.)	(IT)(REF Nos. & DESCRIPTIONS)	
SN74LS365AN (HD74LS365AP)	Z	1
SN74426	Z	2
SN74425	Z	3
2SC2021LN-R	Q	1
1S2473	D	1
RD1/4PM000J	R	1- 8
CEA4R7M35LL	C	1, 2
CKDYF103Z50	C	3, 4
VKN-133	Control terminal	

11-7 KEYC AND IRAB

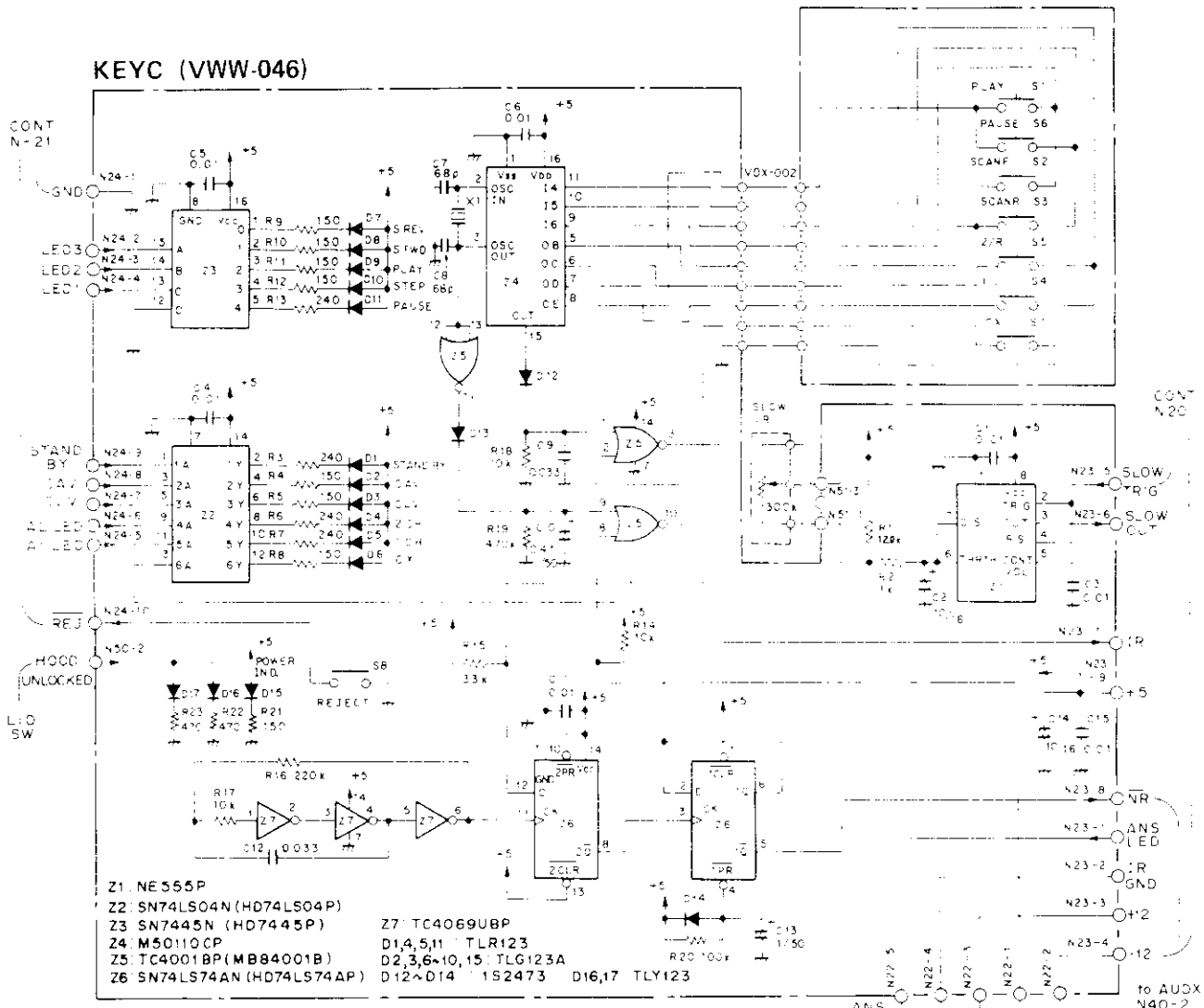

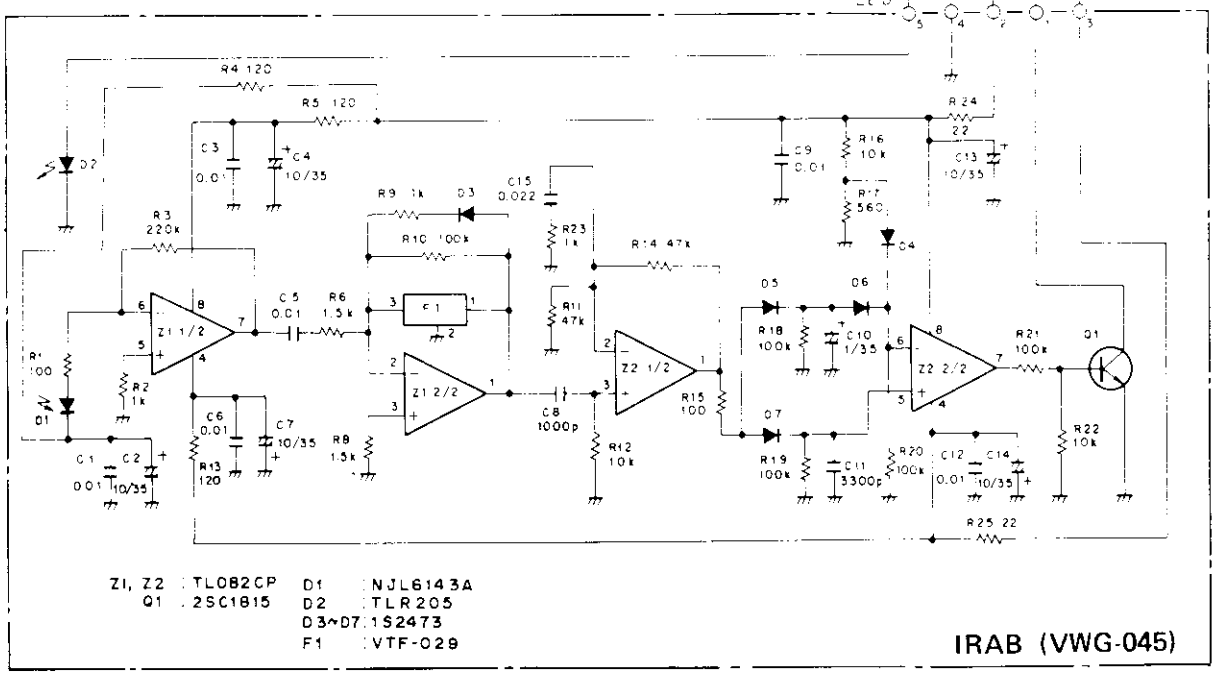

EYC(VWW-046) Parts list 1

(MK)(Part No.)	(IT)(REF Nos. & DESCRIPTIONS)	
NE555P	Z	1
SN74LS04N (HD74LS04P)	Z	2
SN7445N (HD7445P)	Z	3
M50110CP	Z	4
TC4001BP (MB84001BM)	Z	5
SN74LS74AN (HD74LS74AP)	Z	6
TC4069UBP (MB84069BM)	Z	7
TLR123	D	1, 4, 5, 11
TLG123A	D	2, 3, 6- 10, 15
1S2473	D	12- 14
TLY123	D	16, 17
RD1/4PM000J	R	1- 23
CKDYF103Z50	C	1, 3- 6, 11, 15
VCH-011	C	2 10/16
CCDSL101J50	C	7, 8
CKDYF333Z50	C	9
CEAR47M50LL	C	10
CQMA333J50	C	12
CEA010M50LL	C	13
CEA100M16LL	C	14
VSS-002	X	1 455KHz
VSC-004	SW	1- 8
VDX-002	Flat harness	
VNL-089	LED Holder 2	
VNL-090	LED Holder 3	
VNL-091	LED Holder 5	

IRAB(VWG-045) Parts list 1

(MK)(Part No.)	(IT)(REF Nos. & DESCRIPTIONS)	
TL082CP	Z	1, 2
2SC1815-O/Y/GR	Q	1
NJL6143A	D	1
TLR123	D	2
1S2473	D	3- 7
RD1/4PM000J	R	1- 6, 8- 25
CKDYF103Z50	C	1, 3, 5, 6, 9, 12
CEA100M35LL	C	2, 4, 7, 13, 14
CKDYB102K50	C	8, 16
CEA2R2M50LL	C	10
CQMA332K50	C	11
CQMA153K50	C	15
VTF-035 (VTF-029)	F	1 38kHz Notch
VKP-113	Conn.cords	
VEC-081	Sub filter	

A

B

C

D

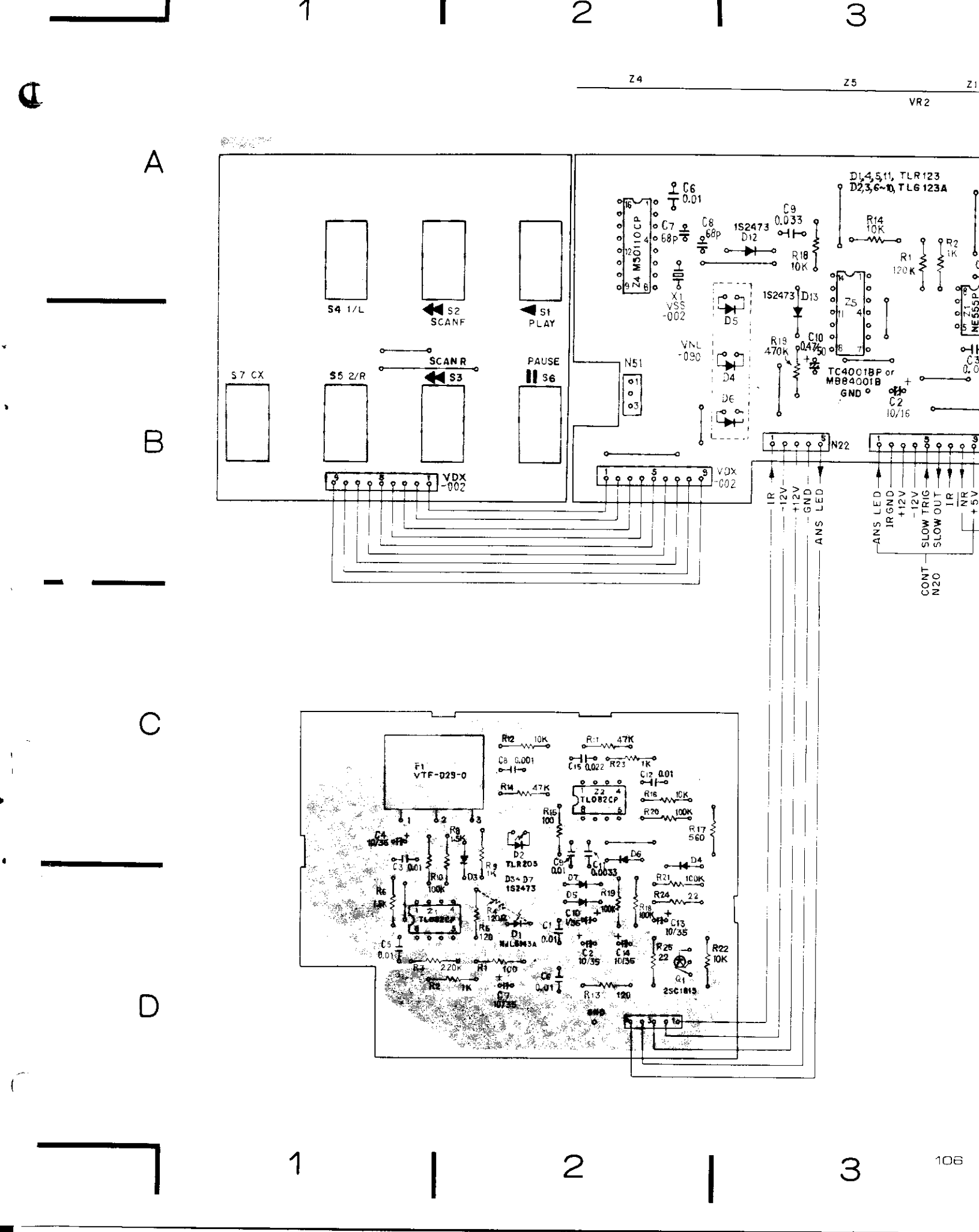
Z4
Z5
VR2
A
B
C
D
S4 1/L
S2 SCANF
S1 PLAY
S7 CX
S5 2/R
SCAN R
S3
PAUSE
S6
VDX -002
N51
C6 0.01
C7 68P
C8 68p
1S2473 D12
C9 0.033
R18 10K
Z4 M3011OCP
X1 VSS -002
D5
VNL -090
D4
D6
D1,4,5,11, TLR123
D2,3,6~10, TLG123A
R14 10K
R1 120K
R2 1K
1S2473 D13
Z5
R19 470K
C10 0.47/50
TC4001BP or MB84001B
GND
C2 10/16
NE555P
N22
IR
-12V
+12V
GND
ANS LED
ANS LED
IR GND
+12V
-12V
SLOW TRIG
SLOW OUT
IR
NR
+5V
CONT N20
F1 VTF-029-0
R12 10K
C8 0.001
R11 47K
C15 0.022
R23 1K
C12 0.01
R14 47K
TL082CP
R16 10K
R20 100K
R15 100
R17 560
C4 10/35
R8 1.5K
D2 TLR205
C3 0.01
R10 100K
D3
R9 1K
D3~D7 1S2473
D6
D4
R6 1.8K
D7
R21 100K
D5
R19 100K
R24 22
R4 20K
R18 100K
C10 1/35
C13 10/35
R5 120
D1 MLS943A
C1 0.01
C2 10/35
C14 10/35
R25 22
R22 10K
C5 0.01
R3 220K
R1 100
R2 1K
C6 0.01
C7 10/35
R13 120
Q1 2SC1815
GND

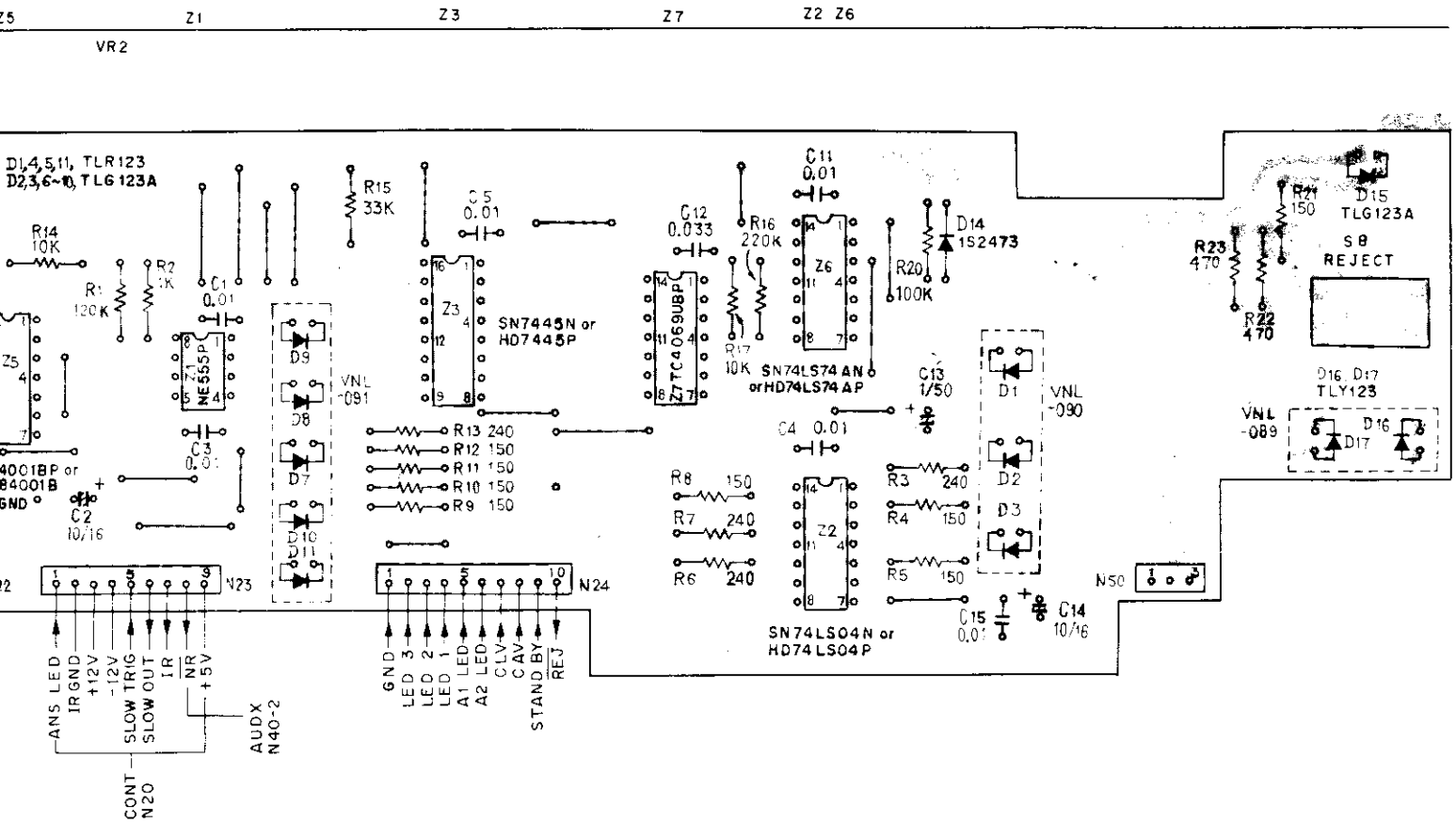

NE555P

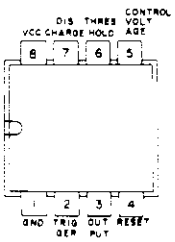

TC4001BP
MB84001BP

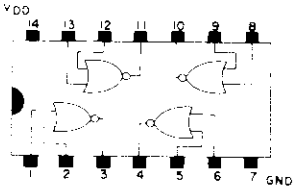

M50110CP

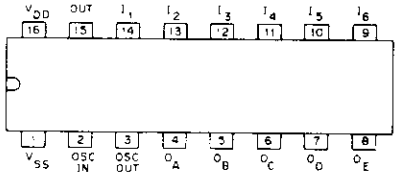

HD74LS04P
SN74LS04N

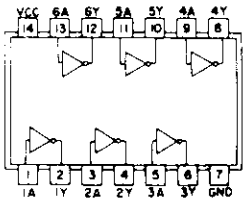

TL082CP

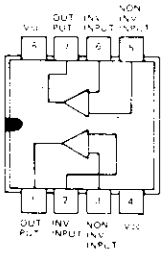

HD7445P

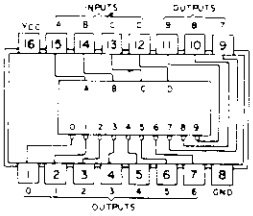

2SA1015
2SC1815

HD74LS74P
SN74LS74N

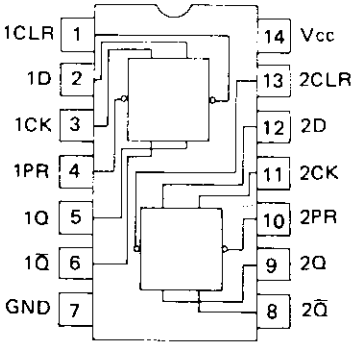

12. EXPLODED VIEWS AND PARTS LIST

12-1 EXTERNAL AND TOP VIEW

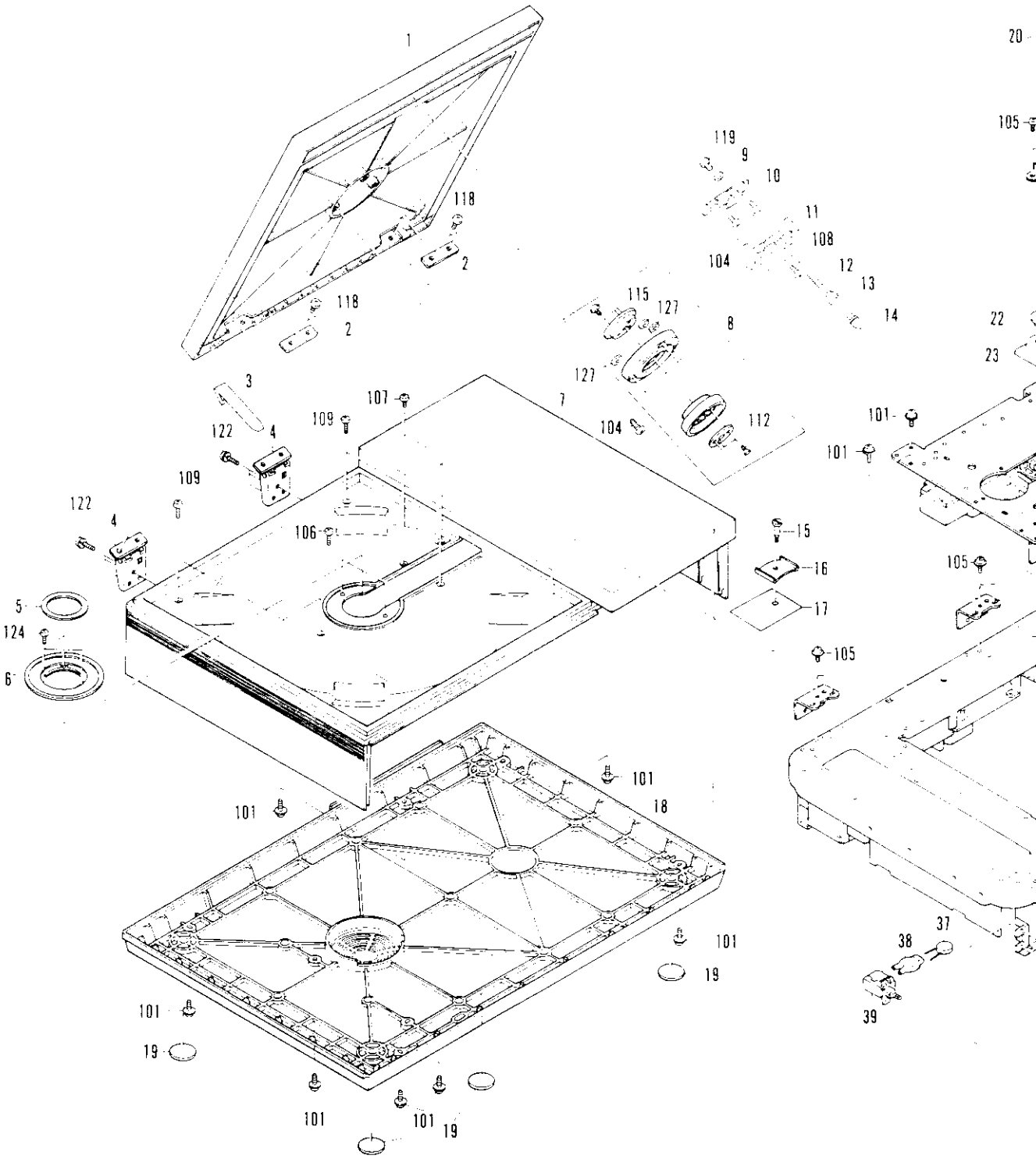

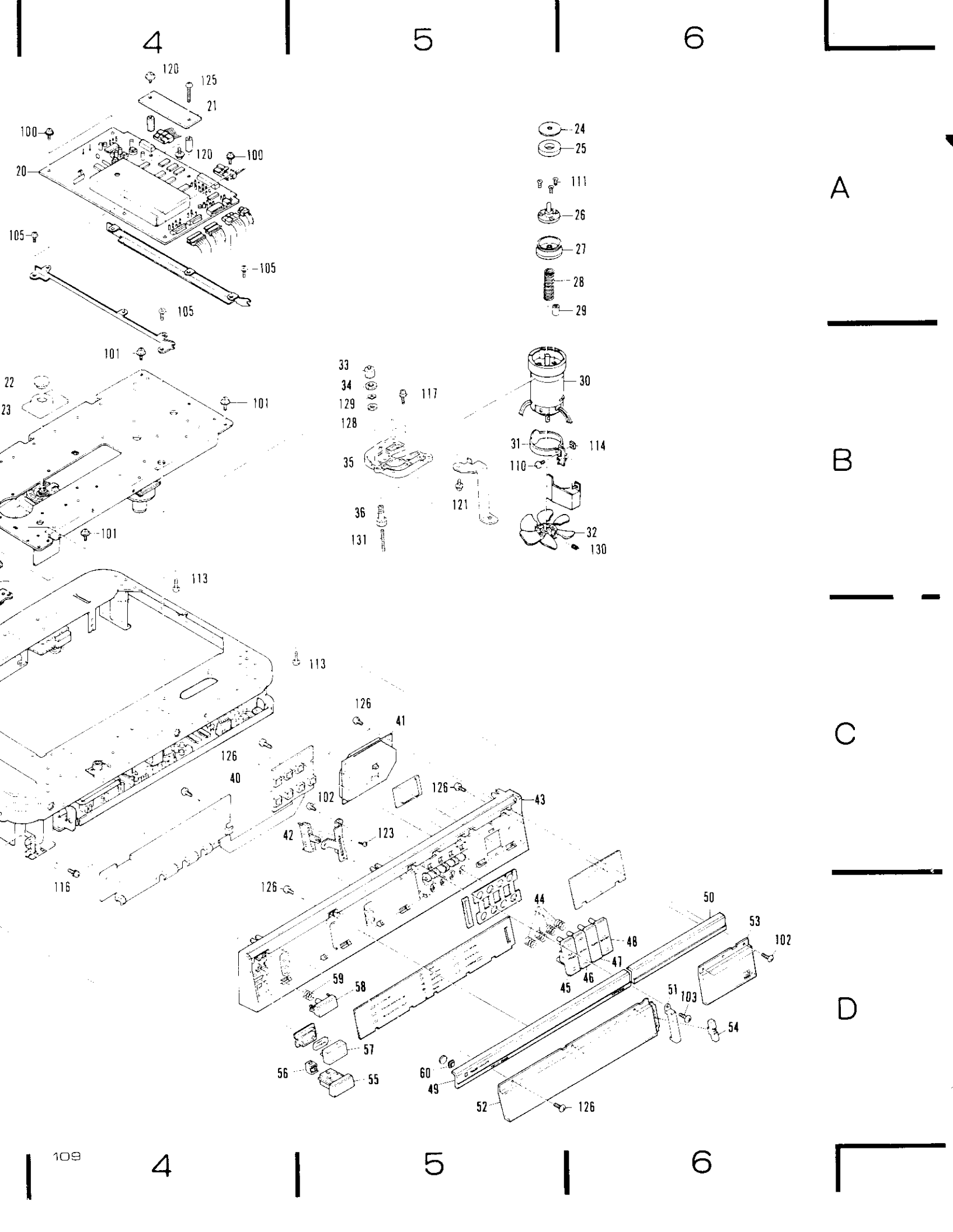
4
5
6
A
B
C
D
120
125
21
100
20
105
101
22
23
113
126
41
40
102
43
42
123
116
44
48
47
46
45
50
53
51
103
54
59
58
57
56
55
60
49
52
24
25
111
26
27
28
29
33
34
129
128
117
30
31
114
110
35
121
36
131
32
130

TOP VIEW PARTS LIST

No.	Parts no.	Parts name
1.	VXX-063	Hood assembly
2.	VNE-244	Plate
3.	VNE-286	Hood lever
4.	VXA-053	Hood hinge
5.	VNL-077	Turntable ring
6.	VNG-004	Turntable
7.	---	Top housing
8.	VXX-041	Disc clamper
9.	VEB-038	Washer
10.	VNE-305	Interlock base
11.	VNL-092	Protector
12.	VBH-059	Spring
13.	VNL-022	Collar
14.	VLA-060	Interlockpin
15.	VLL-089	Shipping screw
16.	VNE-276	Shipping plate
17.	VRW-118	Caution tag
18.	VNK-077	Bottom cover
19.	VED-008	Cushion
20.	VWG-102	Cont
21.	VWG-044	GATB
22.	VHA-012	Lens cap
23.	VNH-027	Focus motor cover
24.	VEC-062	Yoke seal
25.	VMX-001	Clamper magnet
26.	VXA-062	Yoke assembly
27.	VNV-003	Centering hab
28.	VBH-034	Spring
29.	VLP-005	Spacer ring
30.	VXM-017	Spindle motor
31.	---	Capacitor assembly
32.	VNM-001	Fin
33.	---	Holding bolt
34.	---	Nut
35.	---	Motor holder
36.	---	Adjustment bolt
37.	VCG-011	Capacitor
38.	VEC-063	Capacitor cover
39.	VSA-006	Power switch
40.	VWW-046	KEYC
41.	VWG-045	IRAB
42.	VCS-010	Slide volume
43.	VNK-061	Front panel
44.	VBH-058	Key spring
45.	VAC-081	Play key top
46.	VAC-082	Scan key top
47.	VAC-083	Audio key top
48.	VAC-084	CX key top
49.	VNK-065	Front acryl(L)
50.	VNK-133	Front acryl(R)
51.	VNK-068	Volume cover
52.	VNK-063	Acryl cover
53.	VNK-064	Acryl cover
54.	VNL-088	Volume knob
55.	VAC-079	Power button
56.	VEC-070	Flexible ring
57.	VNK-062	Acryl cover
58.	VAC-080	Reject key top
59.	VBH-051	Key spring
60.	VNK-067	Window
100.	ACZ 30P060 FMC	
101.	AMZ 30P080 FMC	
102.	BBZ 30P060 FMC	
103.	BBZ 30P060 FZK	
104.	BBZ 30P080 FZK	
105.	BCZ 30P050 FMC	
106.	BMZ 26P050 FMC	
107.	BMZ 30P040 FZK	
108.	BMZ 30P060 FZK	
109.	BMZ 30P080 FZK	
110.	BMZ 40P120 FMC	
111.	CMZ 26P060 FMC	
112.	CMZ 26P080 FZK	
113.	IPZ 30P080 FMC	
114.	NZ 40 FMC	
115.	PMA 26P060 FMC	
116.	PMA 30P060 FMC	
117.	PMA 30P080 FMC	
118.	PMA 40P120 FZK	
119.	PMB 26P060 FMC	
120.	PMB 30P060 FMC	
121.	PMB 30P080 FMC	
122.	PMB 30P100 FZK	
123.	PMZ 20P030 FMC	
124.	PMZ 26P060 FMC	
125.	VCZ 30P200 FMC	
126.	VPZ 30P060 FMC	
127.	WA 30F080 N100	
128.	WB 50 FMC	
129.	WW 50 FBT	
130.	ZMD 30H040 FBT	
131.	ZND 30H250 FBT	
132.		
133.		
134.		

BOTTOM VIEW PARTS LIST

No.	Parts no.	Parts name
1.	VCS-005	Potentiometer
2.	VXA-059	Gear assembly
3.	VBH-042	Spring
4.	VNL-045	Pinion
5.	VNL-031	Retainer
6.	VNL-034	Roller
7.	VXX-006	Retainer pinion ass'y
8.	VNG-002	Rail
9.	VDG-016	Power cord
10.	VEC-027	Cord stopper
11.	VKN-007	BNC jack
12.	VKB-003	2P pin jack
13.	VWG-101	IOIB
14.	VWM-001	MCNB
15.	---	Mech. chassis
16.	VXM-008	Slider motor
17.	VXA-054	Slider motor holder
18.	VBH-041	Spring
19.	VNL-028	Pinion
20.	VWR-011	LSPS
21.	VNH-023	High voltage cover
22.	VWS-022	VSOP
23.	VWV-023	CPCB
24.	VSF-007	Switch
25.	VBH-040	Switch spring
26.	VKC-005	4P terminal
27.	VTT-016	Power transformer
28.	VWR-019	SYPS
29.	VWG-043	PSCB
30.	VXP-005	Plunger
31.	VSF-006	Switch
32.	VBH-045	Spring
33.	VBH-043	Spring
34.	VXX-039	Inter lock pin guide assembly
35.	VEB-031	Slider cushion
36.	VWV-044	AUDX
37.	VGX-023	Slider assembly

No.	Parts no.
101.	ACZ 30P060 FMC
102.	AMZ 30P080 FMC
103.	BCZ 30P050 FMC
104.	BCZ 30P050 FZK
105.	BMZ 30P060 FZK
106.	BPZ 30P080 FZK
107.	IMZ 20P100 FMC
108.	PMA 30P050 FMC
109.	PMA 30P060 FMC
110.	PMA 30P120 FMC
111.	PMA 30P120 FRD
112.	PMA 30P120 FZK
113.	PMA 40P060 FMC
114.	PMB 30P060 FMC
115.	PMB 30P080 FGN
116.	PMB 30P080 FMC
117.	PMB 40P080 FMC
118.	VCZ 30P080 FMC
119.	VCZ 30P100 FMC
120.	WA 17D035 D025
121.	WC 50 FMC
122.	YE 20 FUC
123.	YE 30 FUC
124.	ZMD 30H060 FBT
125.	ZMK 40H080 FBT

12-2 BOTTOM VIEW

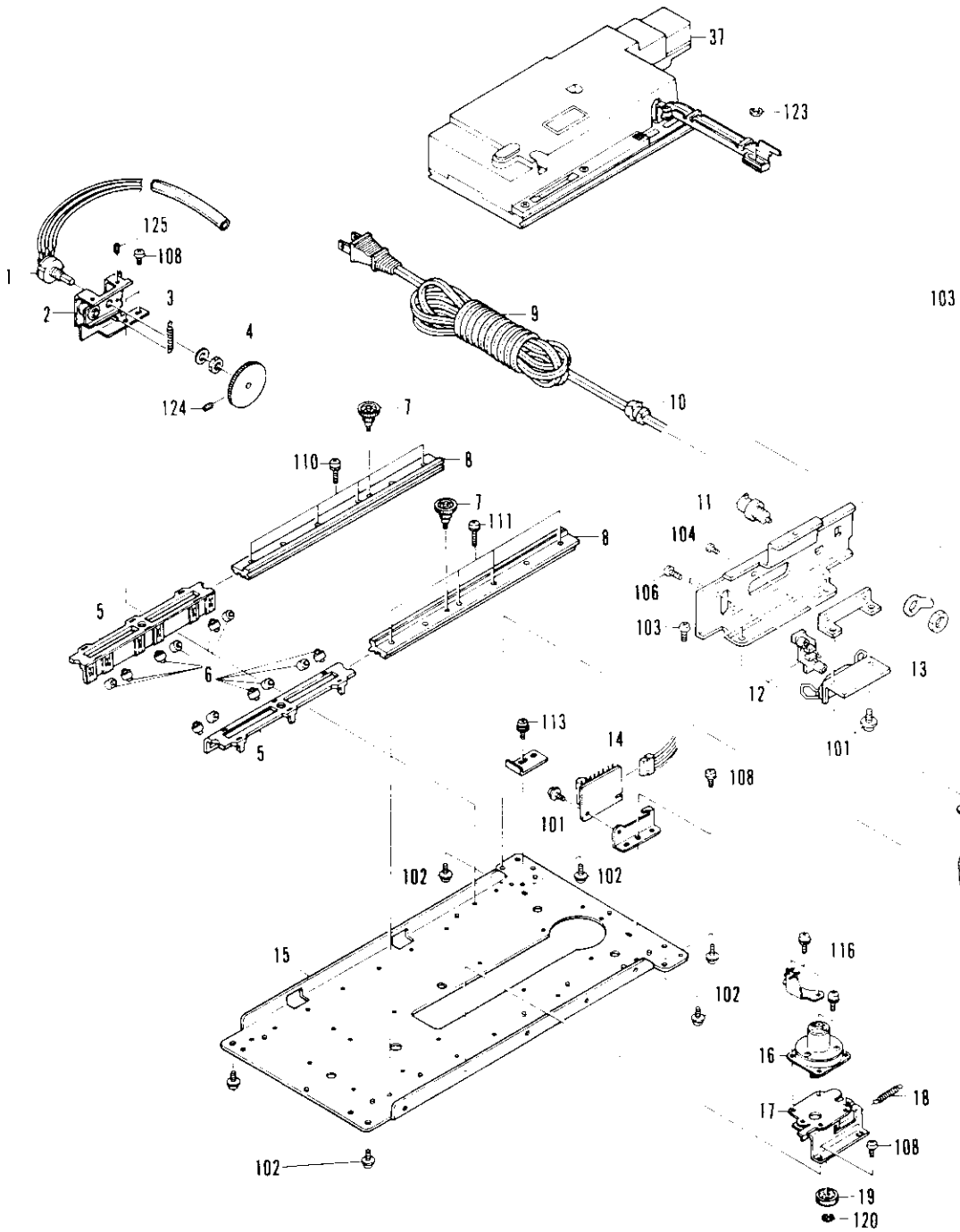

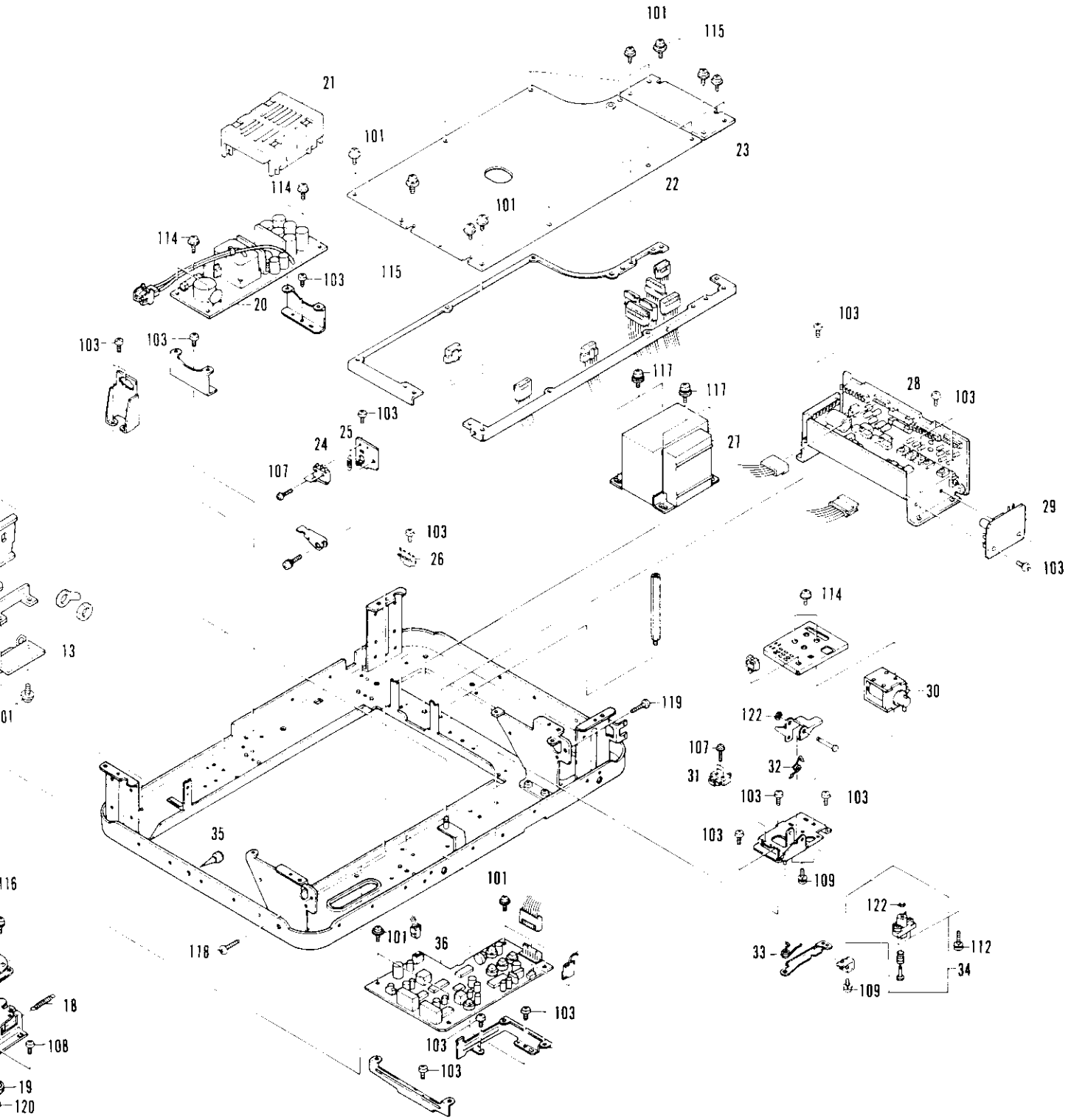
101
115
21
101
23
114
22
101
114
103
115
20
103
103
103
117
117
28
103
103
24
25
27
107
29
103
26
103
114
13
30
119
122
107
32
31
103
103
35
103
109
101
122
101
36
112
33
34
118
109
18
103
108
103
19
103
120

12-3 SLIDER VIEW

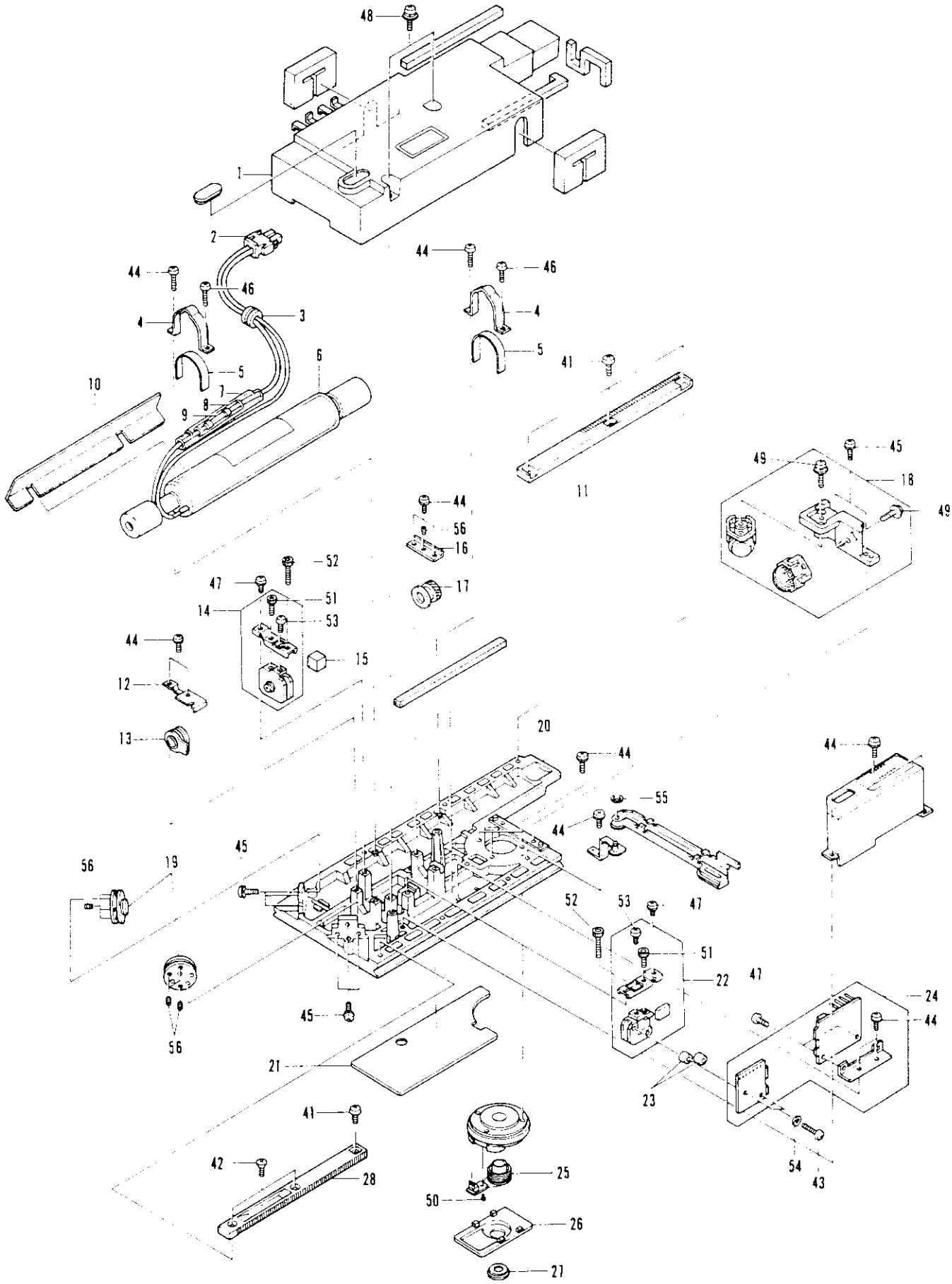

SLIDER PARTS LIST

No.	Parts no.	Parts name
1.	——	Dust cover
2.	VDA-013	H.V. cord assembly
3.	VEB-032	Bushing
4.	VNE-212	Tube holder
5.	VED-014	Tube cushion
6.	VGN-004 (VGN-005)	Laser tube
7.	VXX-021	Vinyl tube
8.	VDM-001	Insulator pipe
9.	VCN-014	Resistor (47kohms/2W)
10.	——	Radiation shield
11.	VNL-044	Rack(G)
12.	VNE-261	Grating holder
13.	VGX-022	Grating assembly
14.	VGX-018	DG lens assembly
15.	——	Prism
16.	VNE-148	Wave plate holder
17.	VGX-016	Wave plate assembly
18.	VGX-024	Servo mirror assembly
19.	VGX-015	Fixed mirror assembly
20.	——	Slider base
21.	VEC-051	Mask plate
22.	VGX-020	Photo-detector assembly
23.	VLP-003	Photo-detector spacer
24.	VWV-010	RFAM
25.	VGX-025	Objective assembly
26.	VNH-027	Focus motor cover
27.	VHA-012	Lens cap
28.	VNL-029	Rack(N)

No.	Parts no.
41.	BMZ 30P060 FMC
42.	CMZ 30P080 FBT
43.	PMA 26P100 FMC
44.	PMA 30P060 FMC
45.	PMA 30P080 FMC
46.	PMA 30P100 FMC
47.	PMB 30P060 FMC
48.	PMB 30P080 FMC
49.	PMB 30P100 FMC
50.	PMZ 20P040 FMC
51.	SMK 30H080 FBT
52.	SMK 30H120 FBT
53.	VCZ 30P060 FMC
54.	WA 26N050 W050
55.	YE 30 FUC
56.	ZMR 30H080 FBT

13. SAFETY INFORMATION

1. SAFETY PRECAUTIONS

The following check should be performed for the continued protection of the customer and service technician.

LEAKAGE CURRENT CHECK

Measure leakage current to a known earth ground (water pipe, conduit, etc.) by connecting a leakage current tester such as Simpson Model 229-2 or equivalent between the earth ground and all exposed metal parts of the appliance (input/output terminals, screwheads, metal overlays, control shaft, etc.). Plug the AC line cord of the appliance directly into a 120V AC 60Hz outlet and turn the AC power switch on. Any current measured must not exceed 0.5mA.

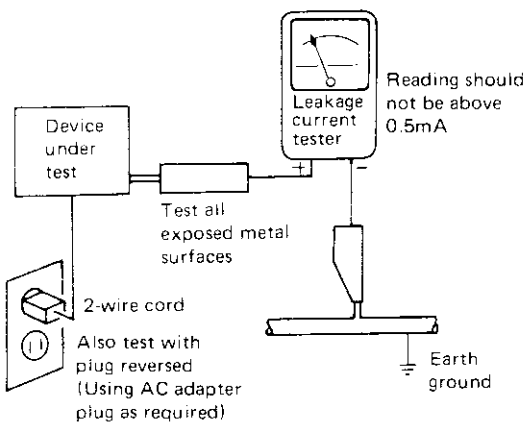

AC Leakage Test

ANY MEASUREMENTS NOT WITHIN THE LIMITS OUTLINED ABOVE ARE INDICATIVE OF A POTENTIAL SHOCK HAZARD AND MUST BE CORRECTED BEFORE RETURNING THE APPLIANCE TO THE CUSTOMER.

2. PRODUCT SAFETY NOTICE

Many electrical and mechanical parts in the appliance have special safety related characteristics. These are often not evident from visual inspection nor the protection afforded by them necessarily can be obtained by using replacement components rated for voltage, wattage, etc. Replacement parts which have these special safety characteristics are identified in this Service Manual.

Electrical components having such features are identified by marking with a on the schematics and on the parts list in this Service Manual.

The use of a substitute replacement component which does not have the same safety characteristics as the PIONEER recommended replacement one, shown in the parts list in this Service Manual, may create shock, fire, or other hazards.

Product Safety is continuously under review and new instructions are issued from time to time. For the latest information, always consult the current PIONEER Service Manual. A subscription to, or additional copies of, PIONEER Service Manual may be obtained at a nominal charge from PIONEER.

14. PACKING PROCESS

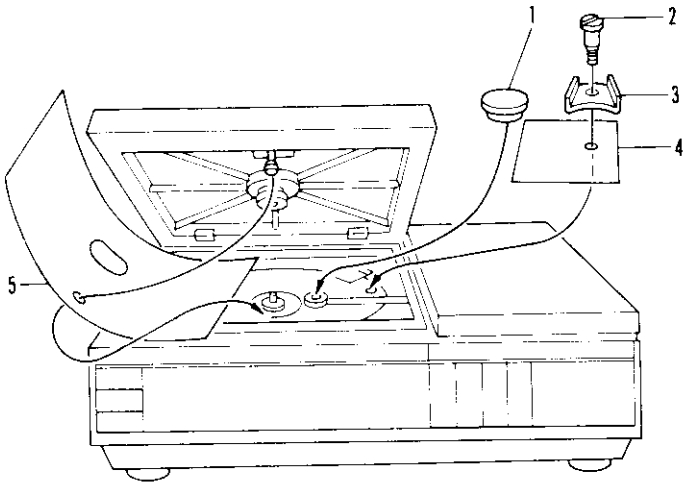

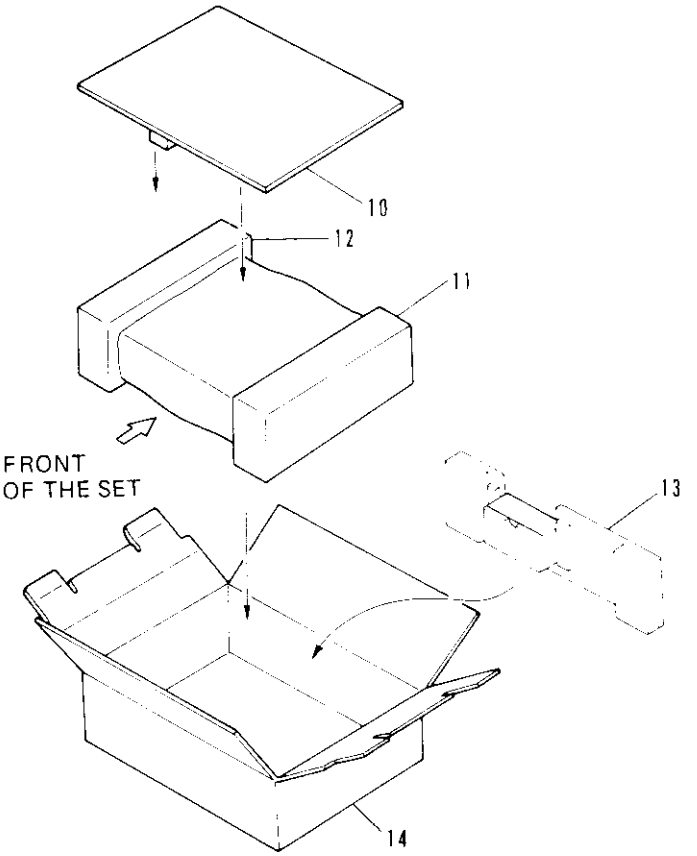

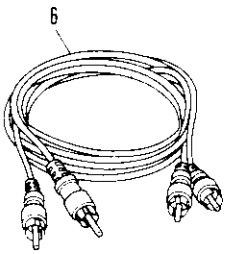

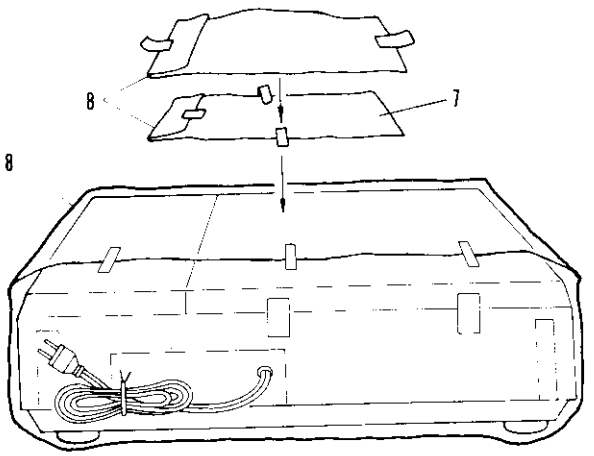

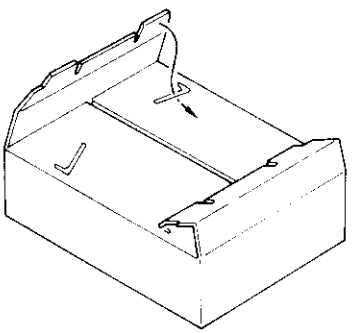

PACKING PROCESS

1. Set the lens cap, loose the shipping screw together with the caution tag and the shipping plate, and then close the hood securely. Power switch must be turned off.
2. Bind the power cord, place the set in the bag and seal it with adhesive tapes as illustrated. Take care that the power plug doesn't hurt the set.
3. Stick the bag containing "Operating Instructions" and the bag containing Audio cords on the packed set.
4. Fit the pad L and R correctly into position at the both ends of the set, place the set in the packing box and insert the holder behind the set and set the cushion board on the set with the cushion against the front of the hood.
5. As illustrated, turn the top of the box in.

Parts List

Mark	No.	Part No.	Description
	1.	VHA-012	Lens cap
	2.	VLL-089	Shipping screw
	3.	VNE-276	Shipping plate
	4.	VRW-118	Caution tag
	5.	VHA-017	Sheet
	6.	VDE-010	Audio connecting cords
	7.	VRB-023	Operating Instructions
	8.	VHL-014	Bag
	9.	VHA-029	Bag
	10.	VXA-069	Cushion board
	11.	VHA-031	Pad R
	12.	VHA-030	Pad L
	13.	VHX-003	Holder
	14.	VHG-069	Packing box